Self Diagnosis Supported model

SERVICE MANUAL

AE-6A CHASSIS

MODEL	COMMANDER	DEST	CHASSIS NO.
KV-32FQ80B	RM-936	FR	SCC-Q83K-A
KV-32FQ80E	RM-936	ESP	SCC-Q81M-A
KV-32FQ80K	RM-936	OIRT	SCC-Q82G-A
KV-32FQ80U	RM-936	UK	SCC-Q84H-A

MODEL	COMMANDER	DEST	CHASSIS NO.
KV-36FQ80B	RM-936	FR	SCC-Q83J-A
KV-36FQ80E	RM-936	ESP	SCC-Q81L-A
KV-36FQ80K	RM-936	OIRT	SCC-Q82F-A

FD Trinitron

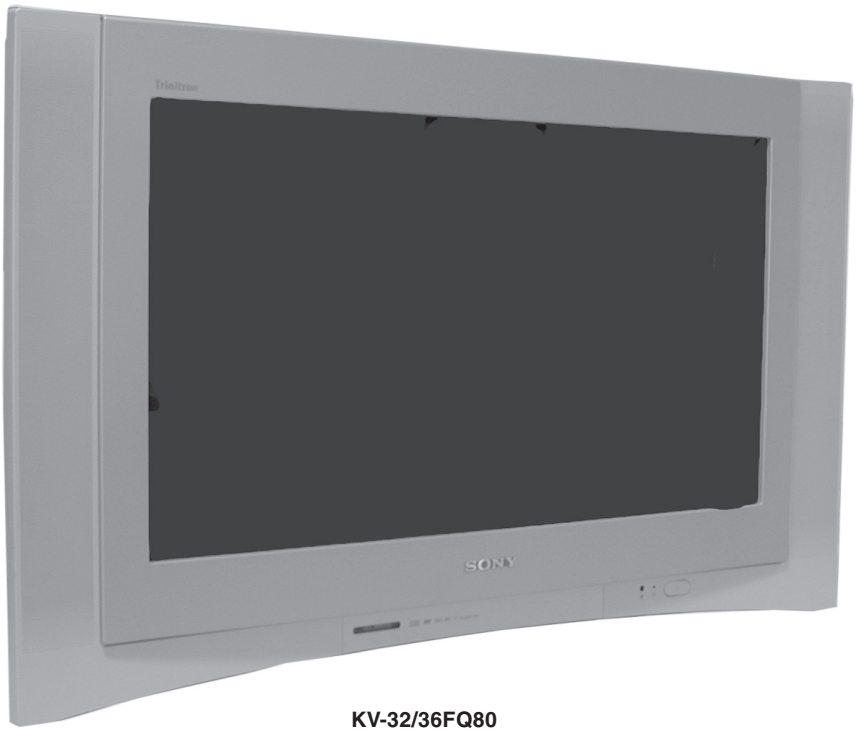

KV-32/36FQ80

RM-936

TRINITRON ® COLOR TV

SONY®

TABLE OF CONTENTS

Section	Title	Page
	Caution	3
	Specifications	4
	Connectors	6
	Self Diagnostic Software	7
1. GENERAL		
	Automatically Tuning the TV	10
	Text	10
	Multi Picture in Picture (Multi PIP)	11
	Picture and Picture (PAP)	11
	NexTView Electronic Programme Guide (EPG)	11
	Using the TV menu system	12
	Viewing Memory Stick Pictures	13
	Remote Control of other equipment	14
	Specifications	15
	Troubleshooting	15
	How to Lift the TV Set	15
2. DISASSEMBLY		
2-1.	Rear Cover Removal	16
2-2.	Speaker Box Removal	16
2-3.	Chassis Removal	16
2-4.	Service Position	17
2-5.	G Board Removal	17
2-6.	D2 Board Removal	17
2-7.	D1 Board Removal	17
2-8.	Wire Dressing 1	18
2-9.	Wire Dressing 2	18
2-10.	Wire Dressing 3	18
2-11.	Wire Dressing 4	18
2-12.	Picture Tube Removal	19
	Bottom Plates	20
3. SET-UP ADJUSTMENTS		
3-1.	Beam Landing	21
3-2.	Convergence	22
3-3.	Focus Adjustment	24
3-4.	Screen (G2), White Balance	24
4. CIRCUIT ADJUSTMENTS		
4-1.	Electrical Adjustments	25
4-2.	Volume Electrical Adjustments	29
4-3.	Test Mode 2	30

Section	Title	Page
5. DIAGRAMS		
5-1.	Block Diagrams (1)	31
	Block Diagrams (2)	32
	Block Diagrams (3)	33
	Block Diagrams (4)	34
	Block Diagrams (5)	35
5-2.	Circuit Board Location	35
5-3.	Schematic Diagrams and Printed Wiring Boards	35
	* A Board Schematic	40
	* A Board PWB	36
	* J2 Board Schematic	44
	* J2 Board PWB	46
	* H3 Board Schematic	45
	* H3 Board PWB	46
	* F3 Board Schematic	45
	* F3 Board PWB	46
	* C1 Board Schematic	47
	* C1 Board PWB	48
	* H Board Schematic	49
	* H Board PWB	48
	* MS2 Board Schematic	49
	* MS2 Board PWB	48
	* M2 Board Schematic	50
	* M2 Board PWB	51
	* D2 Board Schematic	53
	* D2 Board PWB	52
	* D1 Board Schematic	54
	* D1 Board PWB	55
	* G Board Schematic	56
	* G Board PWB	57
	* VM Board Schematic	58
	* VM Board PWB	57
	* B5 Board Schematic	58
	* B5 Board PWB	65
5-4.	Semiconductors	66
5-5.	IC Blocks	68
6. EXPLODED VIEWS		
6-1.	Chassis	71
6-2.	Picture Tube	73
7. ELECTRICAL PARTS LIST		74

ATTENTION

APRES AVOIR DECONNECTE LE CAP DE'LANODE, COURT-CIRCUITER L'ANODE DU TUBE CATHODIQUE ET CELUI DE L'ANODE DU CAP AU CHASSIS METALLIQUE DE L'APPAREIL, OU AU COUCHE DE CARBONE PEINTE SUR LE TUBE CATHODIQUE OU AU BLINDAGE DU TUBE CATHODIQUE.

ATTENTION !!

AFIN D'EVITER TOUT RISQUE D'ELECTROCUTION PROVENANT D'UN CHÁSSIS SOUS TENTION, UN TRANSFORMATEUR D'ISOLEMENT DOIT ETRE UTILISÈ LORS DE TOUT DÈPANNAGE LE CHÁSSIS DE CE RÈCEPTEUR EST DIRECTMENT RACCORDÈ Á L'ALIMENTATION SECTEUR.

ATTENTION AUX COMPOSANTS RELATIFS Á LA SECURITÈ!!

LES COMPOSANTS IDENTIFIÈS PAR UNE TRAME ET PAR UNE MARQUE ⚠ SUR LES SCHÈMAS DE PRINCIPE, LES VUES EXPLOSÈES ET LES LISTES DE PIECES SONT D'UNE IMPORTANCE CRITIQUE POUR LA SÈCURITÈ DU FONCTIONNEMENT, NE LES REMPLACER QUE PAR DES COMPSANTS SONY DONT LE NUMÈRO DE PIÈCE EST INDIQUÈ DANS LE PRÈSENT MANUEL OU DANS DES SUPPLÈMENTS PUBLIÈS PAR SONY.

CAUTION

SHORT CIRCUIT THE ANODE OF THE PICTURE TUBE AND THE ANODE CAP TO THE METAL CHASSIS, CRT SHIELD, OR THE CARBON PAINTED ON THE CRT, AFTER REMOVAL OF THE ANODE CAP.

WARNING !!

AN ISOLATION TRANSFORMER SHOULD BE USED DURING ANY SERVICE WORK TO AVOID POSSIBLE SHOCK HAZARD DUE TO LIVE CHASSIS, THE CHASSIS OF THIS RECEIVER IS DIRECTLY CONNECTED TO THE POWER LINE.

SAFETY-RELATED COMPONENT WARNING !!

COMPONENTS IDENTIFIED BY SHADING AND MARKED ⚠ ON THE SCHEMATIC DIAGRAMS, EXPLODED VIEWS AND IN THE PARTS LIST ARE CRITICAL FOR SAFE OPERATION. REPLACE THESE COMPONENTS WITH SONY PARTS WHOSE PART NUMBERS APPEAR AS SHOWN IN THIS MANUAL OR IN SUPPLEMENTS PUBLISHED BY SONY.

CAUTION

Lead Free Soldered Boards

The circuit boards listed below [Table 1] used in these models may have been processed using Lead Free Solder. The boards are identified by the LF logo located close to the board designation e.g. F1, H1 etc [see examples]. The servicing of these boards requires special precautions to be taken as outlined below.

example 1

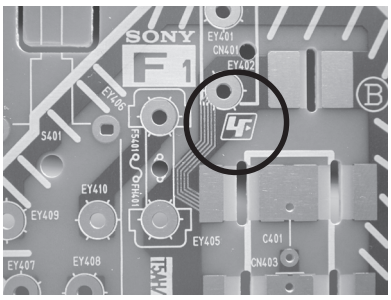

example 2

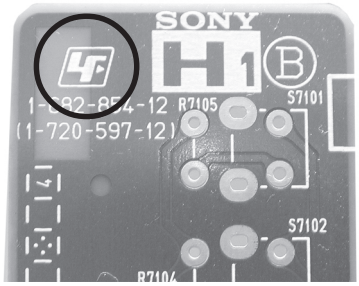

Table 1

Board	Function
H3	AV Link Processor

It is strongly recommended to use Lead Free Solder material in order to guarantee optimal quality of new solder joints. Lead Free Solder is available under the following part numbers :

Partnumber	Diameter	Remarks
7-640-005-19	0.3mm	0.25Kg
7-640-005-20	0.4mm	0.50Kg
7-640-005-21	0.5mm	0.50Kg
7-640-005-22	0.6mm	0.25Kg
7-640-005-23	0.8mm	1.00Kg
7-640-005-24	1.0mm	1.00Kg
7-640-005-25	1.2mm	1.00Kg
7-640-005-26	1.6mm	1.00Kg

Due to the higher melting point of Lead Free Solder the soldering iron tip temperature needs to be set to 370 degrees centigrade. This requires soldering equipment capable of accurate temperature control coupled with a good heat recovery characteristics.

For more information on the use of Lead Free Solder, please refer to *http://www.sony-training.com*

ITEM MODEL	Television System	Stereo System	Channel Coverage	Color System
B	B/G/H, D/K, I, L	GERMAN/NICAM Stereo	VHF : E2-E12, R1-R12, S01-S03, F02-F10, B-Q UHF : E21-E69, F21-F69, B21-B69, R21-R69 CABLE TV : S01-S20 HYPER : S21-S41	PAL, SECAM NTSC4.43, NTSC3.58 (VIDEO IN)
E	B/G/H, D/K	GERMAN/NICAM Stereo	VHF : E2-E12, R1-R12, S01-S03 UHF : E21-E69, R21-R69 CABLE TV : S01-S20 HYPER : S21-S41	PAL, SECAM NTSC4.43, NTSC3.58 (VIDEO IN)
K	B/G/H, DK	GERMAN/NICAM Stereo	VHF : E2-E12, R1-R12, S01-S03 UHF : E21-E69, R21-R69 CABLE TV : S01-S20 HYPER : S21-S41	PAL, SECAM NTSC4.43, NTSC3.58 (VIDEO IN)
U	I	NICAM Stereo	UHF : B21-B69	PAL, SECAM NTSC4.43, NTSC3.58 (VIDEO IN)

<table>
<tr><td rowspan="2">Picture Tube</td><td rowspan="2">Flat Display FD Trinitron
Approx 82 cm (32 inches)
(Approx 76 cm picture measured diagonally) KV-32FQ80
Approx 92cm (36 inches)
(Approx 88cm picture measured diagonally) KV-36FQ80</td><td colspan="2">Sound output</td></tr>
<tr><td>Right and Left speaker

Sub Woofer</td><td>2x20W (Music Power) 2x10W (RMS)

1x30W (Music Power) 1x15W (RMS)</td></tr>
<tr><td colspan="2">Input/Output Terminals [REAR]</td><td colspan="2">General Specifications</td></tr>
<tr><td rowspan="2">1: 21-pin Euro connector (CENELEC standard)</td><td rowspan="2">Inputs for Audio and Video signals.
Inputs for RGB.
Outputs of TV Video and Audio signals.</td><td>Power Requirements</td><td>220 - 240V</td></tr>
<tr><td>Power Consumption</td><td>112W (KV-32FQ80)
143W (KV-36FQ80)</td></tr>
<tr><td rowspan="2">2: 21-pin Euro connector</td><td rowspan="2">Inputs for Audio and Video signals.
Inputs for RGB.
Outputs of TV Video and Audio signals.
(Monitor Out)</td><td>Dimensions</td><td>Approx 910x586x584mm (KV-32FQ80)
Approx 1010x642x607mm (KV-36FQ80)</td></tr>
<tr><td>Weight</td><td>Approx 70.5kg (KV-32FQ80)
Approx 90.0kg (KV-36FQ80)</td></tr>
<tr><td>3: 21-pin Euro connector</td><td>Inputs for Audio and Video signals.
Inputs for S Video.
Outputs of TV Video and Audio signals.
(selectable)</td><td>Supplied Accessories</td><td>RM-936 Remote Commander (1)
IEC designated R6 battery (2)</td></tr>
<tr><td>4: 21-pin Euro connector</td><td>Inputs for Audio and Video signals.
Inputs for S Video.</td><td rowspan="2">Other Features</td><td rowspan="2">100 Hz picture,DRC MF, DCF, Dynamic Picture and Picture, Auto Noise Reduction, Memory Stick Reader, Virtual Dolby, 2 Tuners</td></tr>
<tr><td>Phono Jacks</td><td>Output Connectors variable for Audio Signals</td></tr>
<tr><td colspan="2">Input/Output Terminals [FRONT]</td><td colspan="2">Remote Control System : Infrared Control</td></tr>
<tr><td>Headphone jack</td><td>stereo mini jack</td><td rowspan="4">Power requirements</td><td rowspan="4">3V dc
2 batteries IEC designation
R6 (size AA)</td></tr>
<tr><td>Audio inputs</td><td>phono jacks</td></tr>
<tr><td>Video inputs</td><td>phono jacks</td></tr>
<tr><td>S Video input</td><td>4 pin DIN</td></tr>
<tr><td colspan="4">Design and specifications are subject to change without notice.</td></tr>
</table>

Item \ Model Name	KV-32FQ80B ~ KV-36FQ80B	KV-32FQ80E ~ KV-36FQ80E	KV-32FQ80K ~ KV-36FQ80K	KV-32FQ80U
PIP	OFF	OFF	OFF	OFF
PAP	ON	ON	ON	ON
RGB Priority	ON	ON	ON	ON
Woofer Box	ON	ON	ON	ON
Scart 1	ON	ON	ON	ON
Scart 2	ON	ON	ON	ON
Scart 3	ON	ON	ON	ON
Scart 4	ON	ON	ON	ON
Front in (5)	ON	ON	ON	ON
Projector	OFF	OFF	OFF	OFF
Norm B/G	ON	ON	ON	OFF
Norm I	ON	OFF	OFF	ON
Norm D/K	ON	ON	ON	OFF
Norm AUS	OFF	OFF	OFF	OFF
Norm L	ON	OFF	OFF	OFF
Norm SAT	OFF	OFF	OFF	OFF
Norm M	OFF	OFF	OFF	OFF
Teletext	ON	ON	ON	ON
Nicam Stereo	ON	ON	ON	ON

WARNING (UK Models only)

The flexible mains lead is supplied connected to a **B.S. 1363** fused plug having a fuse of **5 AMP** rating. Should the fuse need to be replaced, use a **5 AMP FUSE** approved by ASTA to **BS 1362**, ie one that carries the ASTA mark.

IF THE PLUG SUPPLIED WITH THIS APPLIANCE IS NOT SUITABLE FOR THE OUTLET SOCKETS IN YOUR HOME, IT SHOULD BE CUT OFF AND AN APPROPRIATE PLUG FITTED. THE PLUG SEVERED FROM THE MAINS LEAD MUST BE DESTROYED AS A PLUG WITH BARED WIRES IS DANGEROUS IF ENGAGED IN A LIVE SOCKET.

When an alternative type of plug is used, it should be fitted with a **5 AMP FUSE**, otherwise the circuit should be protected by a **5 AMP FUSE** at the distribution board.

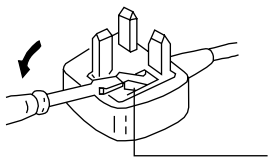

How to replace the fuse.
Open the fuse compartment with a screwdriver blade and replace the fuse.

21 pin connector

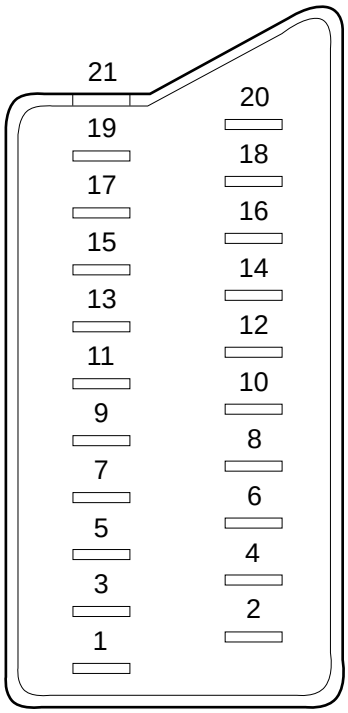

Pin No	1	2	3	Signal	Signal level
1	○	○	○	Audio output B (right)	Standard level : 0.5V rms Output impedence : Less than 1kohm*
2	○	○	○	Audio input B (right)	Standard level : 0.5V rms Output impedence : More than 10kohm*
3	○	○	○	Audio output A (left)	Standard level : 0.5V rms Output impedence : Less than 1kohm*
4	○	○	○	Ground (audio)	
5	○	○	○	Ground (blue)	
6	○	○	○	Audio input A (left)	Standard level : 0.5V rms Output impedence : More than 10kohm*
7	○	●	●	Blue input	0.7 +/- 3dB, 75 ohms positive
8	○	○	○	Function select (AV control)	High state (9.5-12V) : Part mode Low state (0-2V) : TV mode Input impedence : More than 10K ohms Input capacitance : Less than 2nF
9	○	○	○	Ground (green)	
10	○	○	○	Open	
11	○	●	●	Green	Green signal : 0.7 +/- 3dB, 75 ohms, positive
12	○	○	○	Open	
13	○	○	○	Ground (red)	
14	○	○	○	Ground (blanking)	
15	○	–	–	Red input	0.7 +/- 3dB, 75 ohms, positive
	–	○	○	(S signal Chroma input)	0.3 +/- 3dB, 75 ohms, positive
16	○	●	●	Blanking input (Ys signal)	High state (1-3V) Low state (0-0.4V) Input impedence : 75 ohms
17	○	○	○	Ground (video output)	
18	○	○	○	Ground (video input)	
19	○	○	○	Video output	1V +/- 3dB, 75ohms, positive sync 0.3V (-3+10dB)
20	○	–	–	Video input	1V +/- 3dB, 75ohms, positive sync 0.3V (-3+10dB)
	–	○	○	Video input Y (S signal)	1V +/- 3dB, 75ohms, positive sync 0.3V (-3+10dB)
21	○	○	○	Common ground (plug, shield)	

○ Connected ● Not Connected (open) * at 20Hz - 20kHz

Rear Connection Panel

Front Connection Panel

S-Video socket

S Video socket pin configuration		
Pin No	**Signal**	**Signal Level**
1	Ground	-
2	Ground	-
3	Y (S signal) input	1V+/- 3dB 75ohm, positive Sync. 0.3V -3 +10dB
4	C (S signal) input	0.3V+/- 3dB 75ohm, positive Sync.

AE-6A SELF DIAGNOSTIC SOFTWARE

The identification of errors within the AE-6A chassis is triggered in one of two ways :- 1: Busy or 2: Device failure to respond to IIC. In the event of one of these situations arising the software will first try to release the bus if busy (Failure to do so will report with a continuous flashing LED) and then communicate with each device in turn to establish if a device is faulty. If a device is found to be faulty the relevant device number will be displayed through the LED (Series of flashes which must be counted) See table 1., non fatal errors are reported using this method.

Diagnostic Item Description	No of times Standby LED Flashes	Probable cause Location	Detected Symptoms
Power does not turn on	Does not light	Power cord is not plugged in. Fuse is open circuit.	Power does not come on No power is supplied to the TV AC power supply is faulty
+B Overcurrent (OCP)	2 times	H.OUT (Q8102/8103) is shorted. (D1 Board) Linearity FET (Q8106) is shorted. (D1 Board) IC8801 Power IC is shorted. (D1 Board)	Power does not come on Load on power line has shorted
Vertical Deflection stopped	4 times	+15V is not supplied R8207 open (D1 Board) -15V is not supplied R8206 open (D1 Board) IC1701 is shorted (A Board)	Vertical deflection pulse has stopped Power line has shorted

Error Message	LED Code
Reserved	01
OCP (Over Current Protection)	02
OVP (Over Voltage Protection)	03
Vertical Protection	04
Unstable AKB(check starts after 30s,disabled in Production Mode)	05
Horizontal Protection	06
Speaker Protection	07
I2C Bus Error	08
M2-B. ST24C32,NVM	09
A-Board	10
B5 Board	11
J2 Board	12
H Board	13
MS Board	14
B5-B. Main Colour Decoder	15
A-B. CXA2150Q, Backend	16
A-B. MSP3411, Sound Proc.	17
Not used	18-32

Flash Timing Example : e.g. error number 3

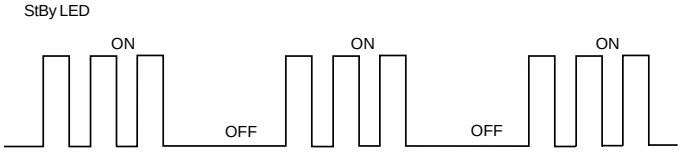

Error Detection Monitor

Device acknowledge is used to check IIC errors. Device acknowledge is checked by sending an IIC start sequence during CRT power on. Each device is checked three times, if there is no acknowledge after each attempt, it will be regarded as an error.
There are three steps to check for errors.

1. IIC line 0
   If all devices except the NVM have errors, IIC line 0 error is displayed.
2. Board check
   If all devices mounted on one board have errors, board error is displayed.
3. Each device check
   If IIC line error and board error are not detected then the device with the error is displayed.

The detected errors can be displayed as follows :

1. Error Monitor Menu.
2. Error Reader.

1. Error Monitor Menu

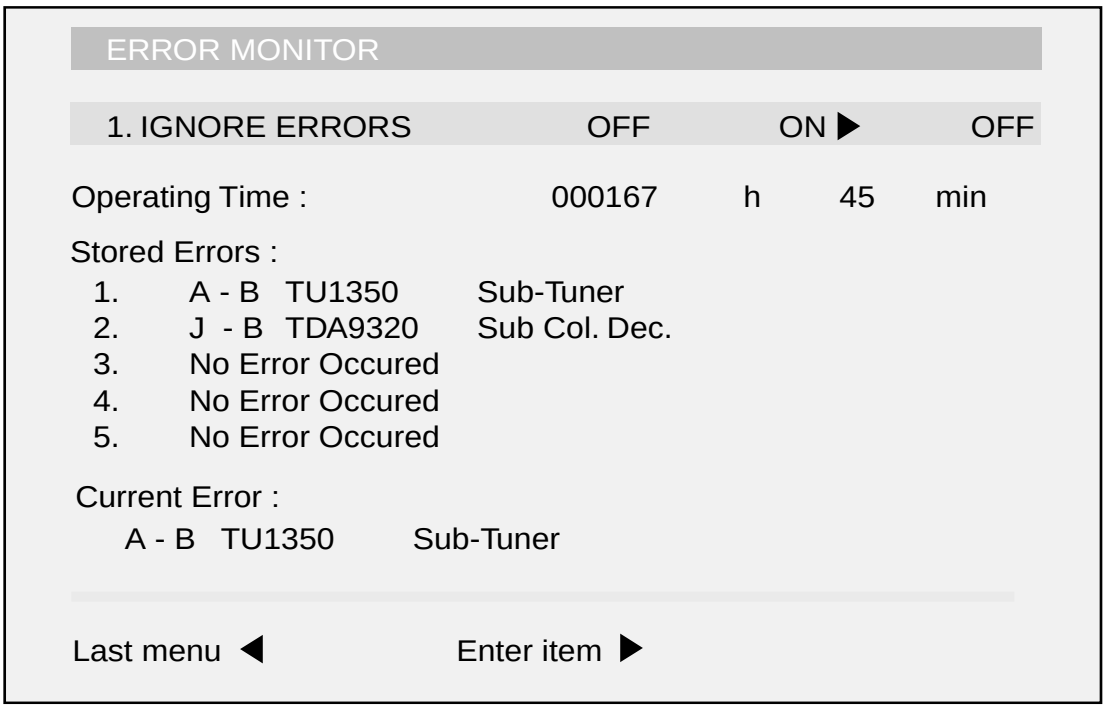

2. Error Reader Display

The error reader display is connected to the service connector to read actual error codes. The part number for the error reader display is S-188-900-10. Once an error has been detected it will then be displayed on the two digit error reader. The errors displayed refer to the following table.

Error Code	Error Message
000h	No Error Occured
001h	Bus Error, I2C0
002h	Bus Error, I2C1
003h	Bus Error, I2C2
100h	A-Board
101h	A-B. CXA1875, Port Exp.
102h	A-B. TU60xx, Main-Tuner
103h	A-B. TDA9886, Main IF
104h	A-B. CXA2150Q, Backend
105h	A-B. MB88141, DAC
106h	A-B. MSP3411G, Sound Proc.
107h	A-B. CXA8070, Dyna. Conv.
200h	B5-Board
201h	B5-B. Main Colour Decoder
202h	B5-B. Sub Colour Decoder
203h	B5-B. MIDX
204h	B5-B. Panorama Gate Array
205h	B5-B. Dig. Noise Reduction
300h	H-Board
301h	H-B. CXD2088, AVLink
400h	J-Board
401h	J2-B. CXA1855, AV Switch
402h	J2-B. CXA2149, AV Switch
403h	J2-B. TU60xx, Sub-Tuner
404h	J2-B. TDA9886, Sub IF
500h	M2-Board
501h	M2-B. ST24C32, NVM
600h	MS1-Board
601h	MS1-B. Memory Stick

The operating instructions mentioned here are partial abstracts from the 'Operating Instruction Manual'. The page numbers of the 'Operating Instruction Manual' remain as in the manual.

5 Automatically tuning the TV

1. When you switch on the TV for the first time the Sony logo appears on the TV screen, followed by the Memory Stick logo, and then by the Language/Country menu with the word 'English' highlighted. Press the ↑ or ↓ buttons on the remote control to highlight your required language. Press the **OK** button to confirm your choice. From now on all menus appear in your chosen language.

2. The word 'Country' is now highlighted. Press the ↑ or ↓ buttons to highlight the country in which you are using the TV. It is important to select the correct country to ensure correct Teletext displays. Press the **OK** button to confirm your choice.

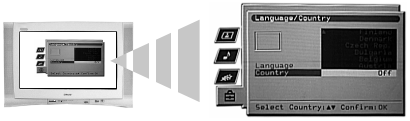

3. The picture rotation prompt appears. Sometimes the Earth's natural magnetism can cause the screen to look tilted.

a) If no correction is required, press the ← button on the remote control.

b) If some correction is required, press the **OK** button on the remote control. Press the ↑ or ↓ buttons to rotate the picture over a range of -5 to +5. Press the **OK** button to store.

4. The autotune prompt screen appears. Press the **OK** button to select **Yes**. The autotune procedure begins, tuning in all the available channels.

A display appears on the TV screen to inform you of the tuning progress.

If no channels are found, a display appears on the TV screen asking you to confirm your aerial is connected. Check the aerial has been connected correctly then press the **OK** button to repeat the tuning process.

5. Once all available channels have been tuned in, the 'Programme Sorting' menu appears. This menu allows you to rearrange the order of the channels on the TV.

a) If you do not wish to rearrange the order, press the **MENU** button to remove the 'Programme Sorting' menu from the TV screen.

b) If you wish to rearrange the order, press the ↑ or ↓ buttons to select the channel you wish to move, then press the → button. Press the ↑ or ↓ buttons to select the new position for your selected channel. Press the **OK** button to confirm. The selected channel moves to its new position. Repeat this procedure if you wish to move other channels. Press the **MENU** button to remove the 'Programme Sorting' menu from the TV screen when you have finished rearranging the channel order.

The TV has now tuned in all the available channels and is ready for use.

Text

Most TV channels provide a Text service. Please ensure you are receiving a good signal or some Text errors may occur.

Viewing Text

1. Select the TV channel which carries the Text service you want to view.

2. Press the ▤ button on the remote control to enter Picture and Text (P&T) mode. The screen is divided in two with the Text display on the left and the TV channel in the right corner.

Note: In P&T mode press the ◔ button followed by **PROG+/-** to change the channel on the TV screen. Press the ◔ button again to resume normal text reception.

Press the ▤ button a second time to enter full screen Text mode.

Press the ▤ button a third time to enter Mix mode.

3. Press the numbered buttons on the remote control to enter the three digits of the page number you wish to view. Alternatively, press the △ or ▽ buttons to view the previous or next page. After a short time the page appears on screen.

4. Enter more 3 digit page numbers as required.

5. Press the ▢ button on the remote control at any time to exit Text mode.

How to use Text features

Feature	How to use
Sub-page Some pages contain sub-pages which follow on automatically. This feature allows you to directly access the required sub-page.	Press the ← or → buttons to select the required sub-page.
Hold This feature allows you to hold the current page until you are ready to proceed.	Press the ⊖/⊕ button to hold the page currently being displayed. Press again to cancel.
Fastext Fastext allows you to access pages quickly and easily. When Fastext is available, four coloured items appear at the bottom of the screen.	Press the corresponding coloured button on the remote control to access the required page.
Page Catching This feature allows you to jump quickly from one page to another.	When viewing a page that contains several page numbers (e.g. the index page), press the **OK** button. Press the ↑ or ↓ buttons to highlight the page number required. Press the **OK** button to confirm. Your chosen page appears on the TV screen.

Multi Picture In Picture (Multi PIP)

This feature displays 13 different channels simultaneously on screen. From this display you can select which channel you wish to view.

1. Press the ▦ button to enter Multi PIP mode.

2. Press the **PROG +/-** buttons repeatedly to select the next or preceding 12 channels.

3. Press the ↑, ↓, ←, or → buttons to move around the 13 displayed channels.

4. Press the **OK** button to select the framed channel. This channel now moves to the centre.

5. Press the **OK** button again to view the selected channel or press the ▦ button to exit Multi PIP mode.

Picture And Picture (PAP)

This feature divides the screen in two for watching two channels simultaneously. The sound of the left screen comes through the TV loudspeakers while the sound from the right screen is selectable via headphones.

1. Press the ◑ button to enter PAP mode.

2. Refer to the table below for explanations of each option.

3. Press the ◑ button to exit PAP mode.

Option	How to use
Selecting sound for the headphones	With the TV in PAP mode set the '🎧 Dual Sound' feature to 'PAP' (Refer to 'Sound Adjustment menu' section for more information.)
Changing the channel of the left screen	Press the **numbered** buttons or **PROG +/-** buttons to select the required channel. Alternatively, press the ⊡/⊡ button to view pictures from equipment connected to the AV sockets of the TV.
Changing the channel of the right screen	Press the ↑ button. The ↑ symbol appears in the right screen. Press the **numbered** buttons or **PROG+/-** buttons to select the required channel. Alternatively, press the ⊡/⊡ button to view pictures from equipment connected to the AV sockets of the TV.
Swapping screens	Press the ⊡ button to swap the screens.
Zooming the screens	Press the ← or → buttons to change the size of the two screens.

NexTView Electronic Programme Guide (EPG)

The NexTView Electronic Programme Guide (EPG) provides you with programming information from different broadcasters, depending on availability of service.

Selecting your NexTView provider

Your TV automatically selects the best NexTView provider for you. This service is available about 30 minutes after you automatically tune the TV. You can however change this selection if you wish.

1. Press the **MENU** button on the remote control to display the menu on the TV screen.

2. Press the ↑ or ↓ buttons to select the ⊡ symbol. Press the → button to enter the 'Set Up' menu.

3. Press the ↑ or ↓ buttons to highlight 'Select NexTView' then press → to confirm. A list is displayed containing all available NexTView providers.

4. Press the ↑ or ↓ buttons to highlight the desired NexTView provider*.

5. Press the **OK** button to confirm and store your selection.

6. Press the **MENU** button to return to normal TV operation.

Notes: *Select the '-----' option to receive the EPG service provided by the current TV channel. When you change the TV channel the EPG from the new channel is automatically loaded (if an EPG service is available).

Displaying and using NexTView

1. Press the ⊡ button on the remote control to display NexTView on the TV screen. In some cases you may also need to press the ← button to display the Sony electronic programme guide.

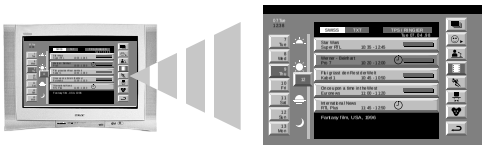

2. Press the ↑,↓, and → buttons to move the cursor around the screen.

3. Press the **OK** button to confirm a selection.

a) If you press the **OK** button in date, time or icon (themes) columns the programme list changes according to the selection.

b) If you press the **OK** button in the programme list the selected programme is displayed. If, however, the programme is not currently being broadcast, the 'Long Info' menu is displayed (see next page).

4. Press the ⊡ button on the remote control to exit NexTView.

Using the TV menu system

This TV contains a menu system which is based on a series of on screen displays. These displays help you get the most from your TV, from customising the picture and sound to accessing advanced features. Use the following buttons on the remote control to operate the TV menu system.

1. Press the **MENU** button to display the main menu.

2. Use the following buttons to operate the menu:

- Press the ↓ or ↑ buttons to highlight the required menu or option.
- Press the → button to enter the required menu or option.
- Press the ← button to return to the last menu or option.
- Press the ↓, ↑, ← or → buttons to alter the settings of the selected option.
- Press the **OK** button to confirm and store your selection.

3. Press the **MENU** button to remove the menu from the TV screen.

Picture Adjustment menu

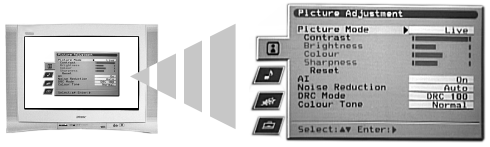

This menu allows you to customise the picture. Highlight the required option and press → to select. The table below explains each option and how to use it.

Option	How to use
Picture Mode This option allows you to select one of four picture modes. The Live, Movie and Game modes are preset and only Contrast can be adjusted. The Personal mode, however, also allows you to adjust the Brightness, Colour and Sharpness options.	Press ↑ or ↓ to select Live, Personal, Movie or Game. Press **OK** to confirm.
Contrast, Brightness, Colour, Sharpness These options allow you to adjust the contrast, brightness, colour and sharpness. **Note:** Brightness, Colour and Sharpness can only be adjusted when Picture Mode is set to Personal.	Press ← or → to set the levels. Press **OK** to confirm.
Reset This option resets all picture settings to the factory preset levels.	Press → to restore default picture settings.
AI (Artificial Intelligence) This option monitors the picture and limits any sudden increases in Brightness and Contrast.	Press ↑ or ↓ to select On or Off. Press **OK** to confirm.
Noise Reduction Sometimes a weak signal can produce a snowy picture (called Picture Noise). This option can help to reduce this effect.	Press ↑ or ↓ to select High, Mid, Low, Auto or Off. Press **OK** to confirm.
DRC Mode DRC (Digital Reality Creation) Mode allows you to enjoy higher quality pictures on your TV. The settings available are: **Off**: Basic 100Hz picture quality. **DRC 50**: Improved picture resolution. **DRC 100**: Optimum picture resolution.	Press ↑ or ↓ to select Off, DRC 50 or DRC 100. Press **OK** to confirm.
Colour Tone This option allows you to alter the tint of the picture. The settings available are: **Warm**: Gives the white colours a red tint. **Normal**: Gives the white colours a neutral tint. **Cool**: Gives the white colours a blue tint.	Press ↑ or ↓ to select Warm, Normal or Cool. Press **OK** to confirm.

Manual Set Up menu

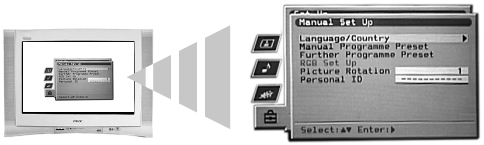

This menu gives you access to more advanced features. The options are:

Language/Country
When you first installed the TV you were asked to select your language and country. The 'Language/Country' option in the 'Manual Set Up' menu allows you to change these settings. With the 'Language/Country' option highlighted, press → to enter the 'Language/Country' menu. Press ↓ or ↑ to select 'Language' or 'Country'. Press → to select. Press ↓ or ↑ to highlight the required setting. Press **OK** to confirm.

Manual Programme Preset
With the 'Manual Programme Preset' option highlighted, press → to enter the 'Manual Programme Preset' menu. The 'Manual Programme Preset' menu is explained on the following page.

Further Programme Preset
With the 'Further Programme Preset' option highlighted, press → to enter the 'Further Programme Preset' menu. The 'Further Programme Preset' menu is explained on page 20.

RGB Set Up
When viewing signals from RGB equipment connected to the AV1 or AV2 sockets (e.g. DVD player, PlayStation) the picture may need adjusting. The 'RGB Set Up' option in the 'Manual Set Up' menu allows you to adjust the size and horizontal picture position of signals from RGB equipment. With the 'RGB Set Up' option highlighted, press → to enter the 'RGB Set Up' menu. Press → to select H Centre. Press ↓ or ↑ to centralise the picture over a range of -10 to +10. Press **OK** to store. Press ↓ to select H Size. Press ↓ or ↑ to adjust the picture size over a range of -10 to +10. Press **OK** to store.

Note: If there is no RGB equipment connected to either the AV1 or AV2 scart sockets the 'RGB Set Up' option will not be available.

Picture Rotation
Due to the Earth's natural magnetism the picture might slant slightly. The 'Picture Rotation' option in the 'Manual Set Up' menu allows you to cancel out this effect. With the 'Picture Rotation' option highlighted, press → to select. Press ↓ or ↑ to rotate the picture over a range of -5 to +5. Press **OK** to store.

Personal ID
The 'Personal ID' option in the 'Manual Set Up' menu allows you to enter a code which could help to trace you should the TV be stolen and recovered. This code can only be entered once - please make a note of it and keep it safe. With the 'Personal ID' option highlighted, press → to select. Press ↓ or ↑ to display the first character of the code you wish to use. Press → to select. Repeat until all characters have been entered. Press **OK** to store. A confirmation screen is displayed. Press **OK** to confirm.

Manual Programme Preset menu

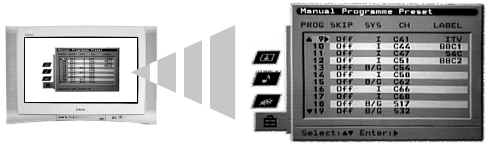

The 'Manual Programme Preset' option in the 'Manual Set Up' menu allows you to manually tune in channels. With the 'Manual Programme Preset' option highlighted, press ➡ to enter the 'Manual Programme Preset' menu. Press ⬇ or ⬆ to highlight the channel you wish to tune. Press ➡ twice to select the SYS column. Press ⬇ or ⬆ to select 'I' for the TV broadcast system or EXT for an external input source). Press ➡ to confirm and select the CH column. Press ⬇ or ⬆ to select the channel tuning (C for terrestrial channels, S for cable channels or F for direct frequency input). Press ➡ to confirm. You now need to tune the channel by one of the following methods:

(a) If you know the channel number of the TV broadcast, the VCR test signal or the frequency:
Press the **numbered** buttons on the remote control to enter the channel number. Press **OK** to store.

(b) If you do not know the channel number:
Press ⬇ to select SEARCH. The TV set automatically searches for the next available TV broadcast channel or the VCR test signal. When a channel has been found press either **OK** to store or ⬇ to continue searching.

(c) For external input sources (EXT):
Press ⬇ to select AV1, AV2, AV3, AV4 or AV5 depending on which socket you have connected your equipment to. Press **OK** to store.

Labelling a channel
Names for channels are usually taken automatically from Teletext (if available). This name will be displayed briefly on screen when the channel is selected. The 'LABEL' option in the 'Manual Programme Preset' menu allows you to assign a name of your choice up to 5 characters or numbers. With the 'Manual Programme Preset' option highlighted, press ➡ to enter the 'Manual Programme Preset' menu. Press ⬇ or ⬆ to highlight the channel number you require. Press ➡ repeatedly to select the LABEL column. Press ⬇ or ⬆ to select the first character. Press ➡ to confirm this character. Select the other characters in the same way. After selecting all required characters, press **OK** to store.

Skipping a channel
The 'SKIP' option in the 'Manual Programme Preset' menu allows you to skip unused channel positions when selecting channels with the **PROG+/-** buttons. However, you can still select skipped channels by using the **numbered** buttons on the remote control. With the 'Manual Programme Preset' option highlighted, press ➡ to enter the 'Manual Programme Preset' menu. Press ⬇ or ⬆ to highlight the channel number you require. Press ➡ to select the SKIP column. Press ⬇ to select On (select Off to remove the SKIP feature). Press **OK** to store.

Viewing Memory Stick pictures

A 'Memory Stick'* is a new recording medium with a data capacity that exceeds a floppy disk. It is specially designed for exchanging and sharing digital data among 'Memory Stick' compatible products. Use 'Memory Stick' to display JPEG pictures (DCF version 1.0 format)** individually or as a slideshow presentation on the TV screen. Because it is removable, 'Memory Stick' can also be used for external data storage.

Inserting 'Memory Stick'

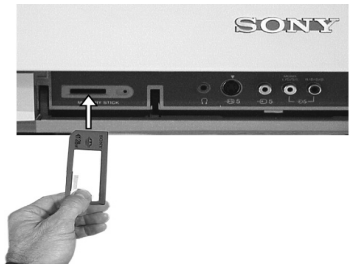

Insert a memory stick into the front control panel of the TV set until it clicks into the connector. The ▲ symbol must be facing forwards. The red light flashes indicating that the memory stick contents are being read.

Removing 'Memory Stick'

Confirm that the red light is off. Push the memory stick and then release, the memory stick will spring out. Remove the memory stick.

The 'Memory Stick' menu

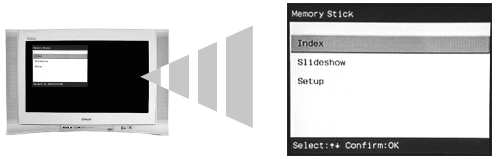

The 'Memory Stick' menu is displayed automatically when you insert the memory stick into your TV set. Alternatively, if there is a memory stick already inserted, press the **MEMORY STICK** button on the remote control to display the menu screen. There are 3 options available, namely 'Index', 'Slideshow' and 'Setup'.

Notes:
* Memory Stick' and the logo are trademarks of Sony Corporation.
** DCF (Design rules for Camera File systems) is a standard file name format for digital still cameras, DV camcorders etc. It is supported by SONY and other manufacturers.

Index

This feature enables you to view on screen the JPEG DCF format pictures from your memory stick.

1. Press the **MEMORY STICK** button on the remote control to display the 'Memory Stick' menu on the TV screen.

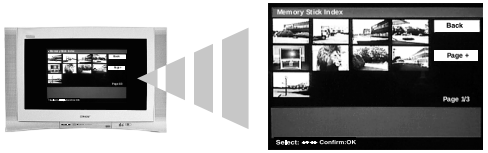

2. Press the ↑ or ↓ button to highlight 'Index' then press the **OK** button to display the 'Memory Stick Index' screen.

3. Press the ↓, ↑, ← or → buttons to highlight the required picture, then press the **OK** button to display the picture fully on the TV screen.

Note: Only a limited number of pictures can be displayed on the Index screen at one time. If your required picture is not visible, highlight 'Page +' then press the OK button to view the next set of pictures. Press the ↓, ↑, ← or → buttons to select your desired picture then press the OK button to view.

4. Use the ↓, ↑, ← or → buttons to highlight 'Back'. Press the **OK** button to return to the 'Memory Stick' menu or press the ⬭ button at any time to return to normal TV operation.

Slideshow

This feature allows you to display all the memory stick pictures as a slideshow presentation on the TV screen.

1. Press the **MEMORY STICK** button on your remote control to display the 'Memory Stick' menu on the TV screen.

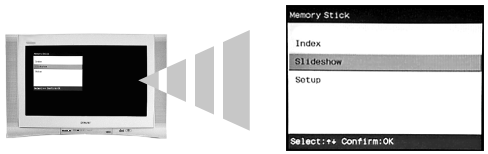

2. Press the ↑ or ↓ button to highlight Slideshow.

3. Press the **OK** button to start the slideshow. (To change the length of time an image is displayed refer to the 'Setup' section on the following page.)

4. Press the **OK** button during the slideshow to return to the 'Memory Stick' menu. Press the ⬭ button to return to normal TV operation.

Remote control of other equipment

The remote control supplied with your TV operates not only Sony VCRs and DVD players, but also those made by other manufacturers. The following instructions guide you through the set up procedure.

1. Find the 3 digit code for your brand from the list below.

2. Press the ◄ MODE ► button on the remote control until either the green VCR light or the green DVD light illuminates.

3. With the required green light illuminated, press and hold down the **YELLOW** button for approximately 6 seconds, until this light starts to flash.

4. Use the **numbered** buttons to enter the 3 digit code for your VCR or DVD. Once a correct number has been entered, all the green VCR, TV and DVD lights illuminate together momentarily.

5. Turn on your VCR or DVD and check that the remote control operates the main functions. If not, repeat steps 2 - 4 and enter the next 3 digit code allocated to your brand of VCR or DVD.

6. When you wish to use the remote control to operate the TV again, press the ◄ MODE ► button until the TV green light illuminates. Don't forget to select VCR or DVD using the ◄ MODE ► button every time you wish to operate that equipment with this remote control.

Note: The brand codes you set may be lost if weak batteries are not replaced immediately. Should this happen, use the above procedure to re-enter the code. A small label has been attached to the inside of the battery cover for you to make a note of your brand codes. Not all brands and models of VCRs and DVDs are covered in this list, however, Sony will endeavour to update the software periodically. Please refer to the code table provided with your remote control.

VCR Brand List		DVD Brand List	
Brand	**Code**	**Brand**	**Code**
SONY (VHS)	001	SONY	001
SONY (BETA)	021	AIWA	021
SONY (DVD)	018, 027, 020, 002	DENON	018, 027, 020, 002
AIWA	009, 028, 023, 024, 016, 003	GRUNDIG	009, 028, 023, 024, 016, 003
AKAI	025, 026, 015, 004	HITACHI	025, 026, 015, 004
DAEWOO	006, 017	JVC	006, 017
GRUNDIG	008	KENWOOD	008
HITACHI	015, 014	LG	015, 014
JVC	009, 028, 023, 024, 016, 003	LOEWE	009, 028, 023, 024, 016, 003
LG	013, 016	MATSUI	013, 016
LOEWE	022	ONKYO	022
MATSUI	018, 027, 020, 002	PANASONIC	018, 027, 020, 002
ORION	009, 028, 023, 024, 016, 003	PHILIPS	009, 028, 023, 024, 016, 003
PANASONIC	004	PIONEER	004
PHILIPS	011, 014	SAMSUNG	011, 014
SAMSUNG	007	SANYO	007
SANYO	019, 027	SHARP	019, 027
SHARP	012	THOMSON	012
THOMSON	003	TOSHIBA	003
TOSHIBA	018, 027, 020, 002	YAMAHA	018, 027, 020, 002

Specifications

TV System
I

Colour System
PAL
NTSC 3.58, 4.43 (only Video In)

Channel Coverage
UHF: B21 - B69

Picture Tube
KV-32FQ80 FD Trinitron Approx. 82cm
KV-36FQ80 FD Trinitron Approx. 91cm

Sound Output
Left/Right: 2x20W (music power)
2x10W (RMS)
Subwoofer: 1x30W (music power)
1x15W (RMS)

Power Consumption
KV-32FQ80: 112W
KV-36FQ80: 143W

Dimensions (w x h x d)
KV-32FQ80: Approx. 910 x 445.5 x 590mm
KV-36FQ80: Approx. 1010 x 645 x 607mm

Weight
KV-32FQ80: Approx. 67kg
KV-36FQ80: Approx. 87kg

Rear Terminals

1	21-pin Euro connector (CENELEC standard) including audio/ video input, RGB input, TV audio/video output.
2 DVD	21-pin Euro connector (CENELEC standard) including audio/ video input, RGB input, TV audio/video output.
(SMARTLINK) 3/3 VCR	21-pin Euro connector (CENELEC standard) including audio/ video input, S-video input, selectable audio/video output.
4/4	21-pin Euro connector (CENELEC standard) including audio/ video input, S-video input.
	RF In
L(MONO) R	Audio output - phono jacks

Front Terminals

5	Video input - phono jack
5	Audio inputs - phono jacks
5	S video input - 4 pin DIN
	Headphones jack - minijack stereo

Accessories Supplied
RM-936 remote control (1)
IEC designated size AA (R6) battery (2)

Design and specifications are subject to change without notice.

Troubleshooting

Here are some simple solutions to problems which may affect the picture and sound.

Problem	Suggested Remedy
No picture (screen is dark), no sound.	• Plug the TV in. • Press the ⏻ button on the front of the TV. • If the ⏻ indicator on the TV is lit press the TV ⏻ button or a numbered button on the remote control. • Check the aerial connection. • Turn the TV off for 3 or 4 seconds and then turn it on again using the ⏻ button on the front of the TV.
Poor or no picture (screen is dark), but good sound.	• Using the MENU system, select the Picture Adjustment menu. Adjust the brightness, picture and colour balance levels. • From the Picture Adjustment menu select RESET to return to the factory settings.
Good picture, no sound.	• Press the + button on the remote control. • If 🔇 is displayed on the screen, press the 🔇 button on the remote control.
No colour on colour programmes.	• Using the MENU system, select the Picture Adjustment menu and adjust the colour setting. • From the Picture Adjustment menu select RESET to return to the factory settings.
Distorted picture when changing channels or selecting Text.	• Turn off any equipment connected to the scart connectors on the rear of the TV.
Remote control does not function.	• Check that the ◄ MODE ► Selector button on the remote control is set according to the device you are using (VCR, DVD or TV). • If the remote control does not operate your VCR or DVD even when the ◄ MODE ► Selector button has been set correctly, refer to the 'Remote control of other equipment' section of this instruction manual and enter the correct code. • Replace the batteries.
Interference on picture from connected equipment.	• Reduce sharpness level.
The standby indicator ⏻ on the TV flashes.	• Contact your nearest Sony service centre.

- **If you continue to have these problems, have your TV serviced by qualified personnel.**
- **NEVER open the casing yourself.**

4-087-551-**61**
408755161

= KV-32FQ80

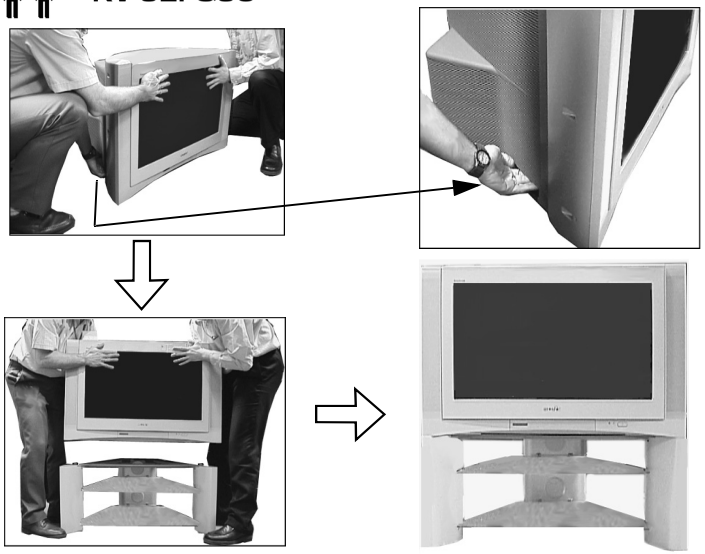

= KV-36FQ80

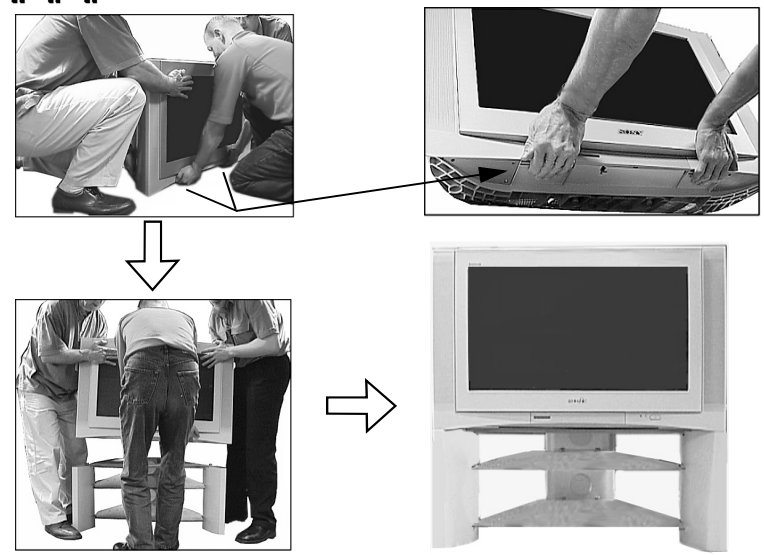

http://www.world.sony.com/

SECTION 2 DISASSEMBLY

2-1. Rear Cover Removal

Remove the rear cover fixing screws indicated and pull the rear cover backwards away from the set.

2-2. Speaker Box Removal

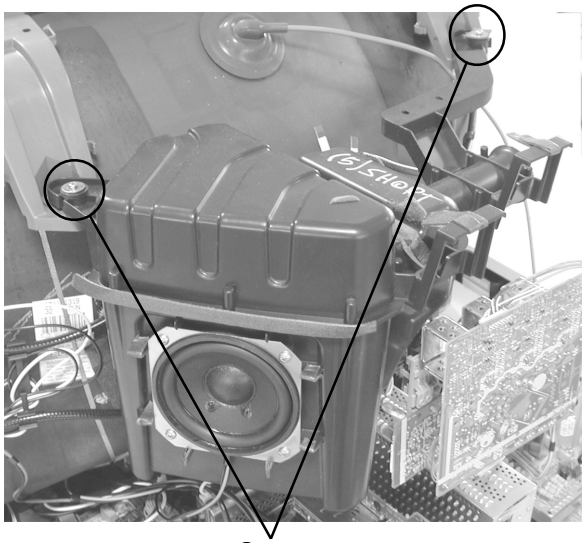

Screws

To remove the speaker box assembly remove the two screws circled and unplug the speaker lead from connector CN1202 on the 'A' board. The assembly can then be lifted gently away from its supporting arms.

2-3. Chassis Removal and Refitting

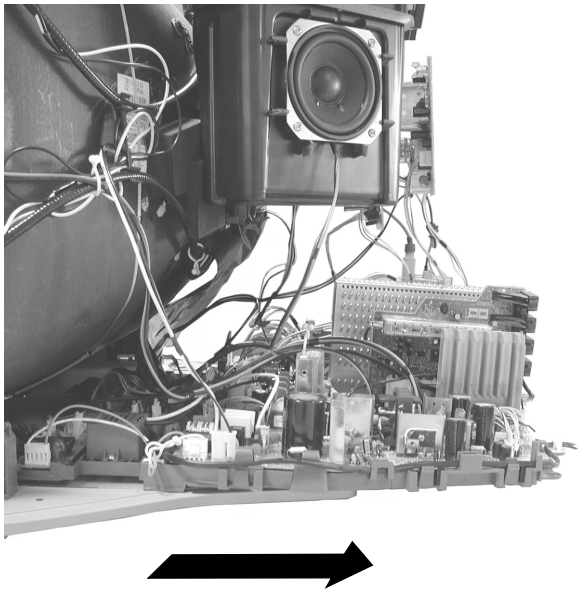

To remove lift the main bracket rear slightly and slide the chassis away from the beznet. Ensure that the interconnecting leads are released from their purse locks to prevent damage being caused.

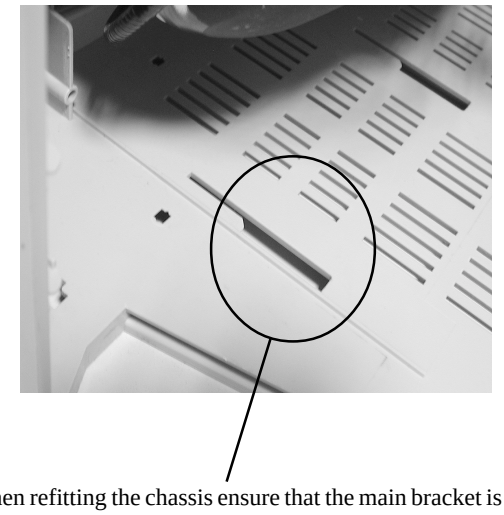

When refitting the chassis ensure that the main bracket is located in the beznet guide slots before sliding the chassis forwards. Refit the inter-connecting leads in their respective purse locks.

2-4. Service Position

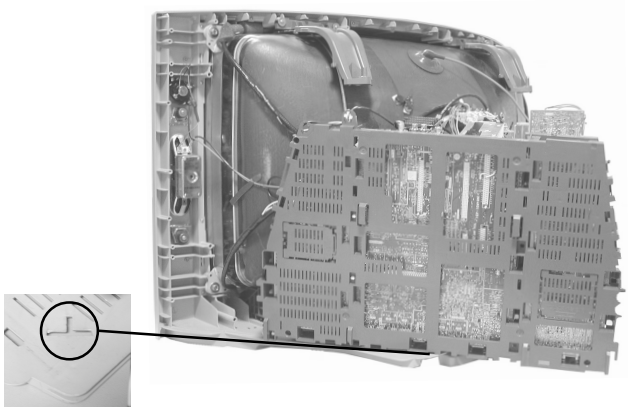

To place the chassis in the service position, remove the speaker assembly box (see 2-2.) and insert the main bracket firmly into the T-slot located on the left corner of the beznet as indicated (see inset). To gain access to the underside of the boards follow the instructions on page 20. [Removal and Replacement of the main bracket bottom plates].

2-5. G Board Removal

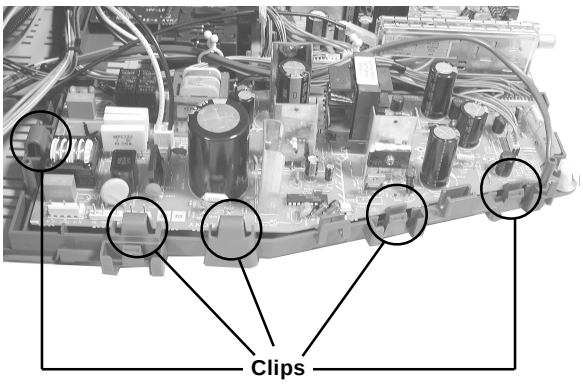

To remove the G Board release the clips circled and ease the board gently away from the support bracket.

2-6. D2 Board Removal

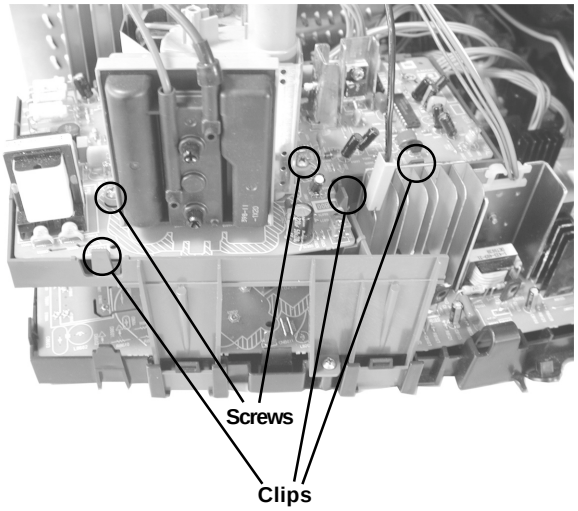

To remove the D2 board remove the two screws circled, release the clips circled and ease the board gently away from the support bracket.

2-7. D1 Board Removal

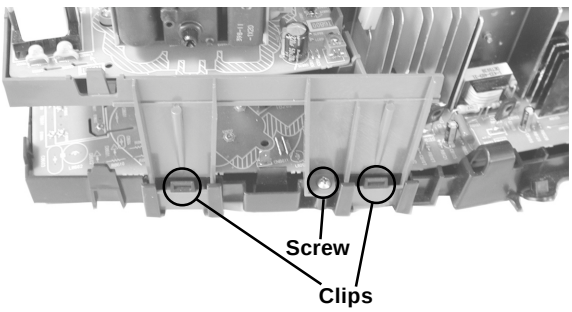

To remove the D1 board first remove the D2 bracket by removing the two screws (one on each side of the bracket) and releasing the four clips (two on each side of the bracket). The D1 board can then be removed using the same method as the G board.

2-8. Wire Dressing 1

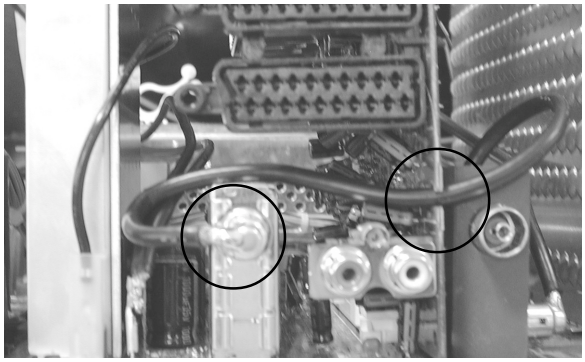

Ensure the RF lead is dressed as shown circled above to avoid obstructing the rear cover.

2-9. Wire Dressing 2

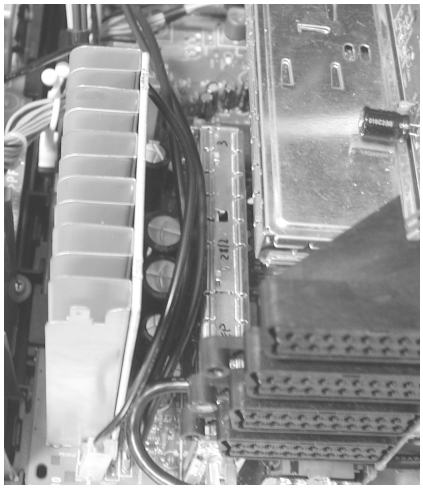

To avoid damage to the ground interconnecting leads from the sharp edges of the heatsink they must be dressed as shown above between the rear of the heatsink and the tuner.

2-10. Wire Dressing 3

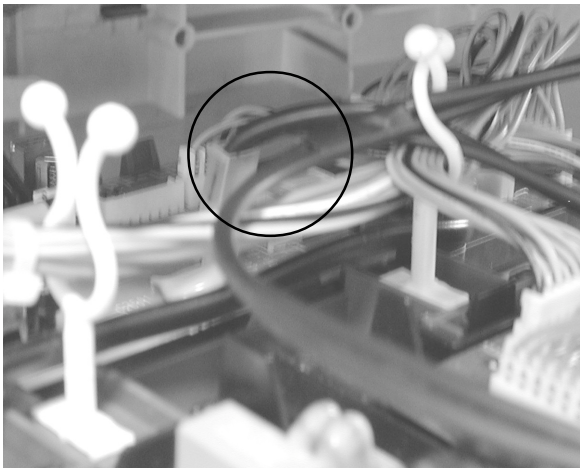

The sheathed end of the ground connecting lead must be plugged into the F3 board to avoid the possibility of the AC mains power touching ground.

2-11. Wire Dressing 4

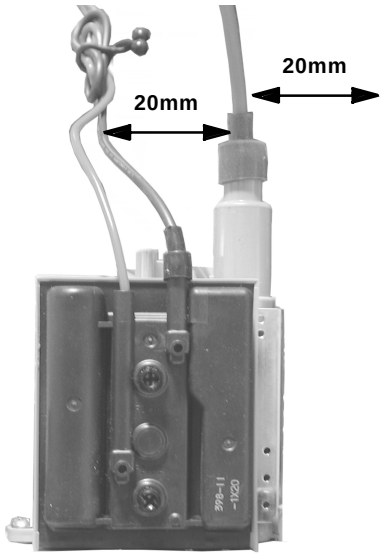

Ensure that wires do not touch heatsinks and high temperature hotspots. All wires must be kept at a minimum distance of 20mm away from the EHT lead

2-12. Picture Tube Removal

WARNING:
BEFORE REMOVING
THE ANODE CAP

High voltage remains in the CRT even after the power is disconnected. To avoid electric shock, discharge CRT ***before*** attempting to remove the anode cap. Short between anode and CRT coated earth ground strap.

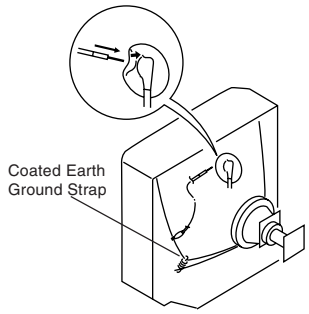

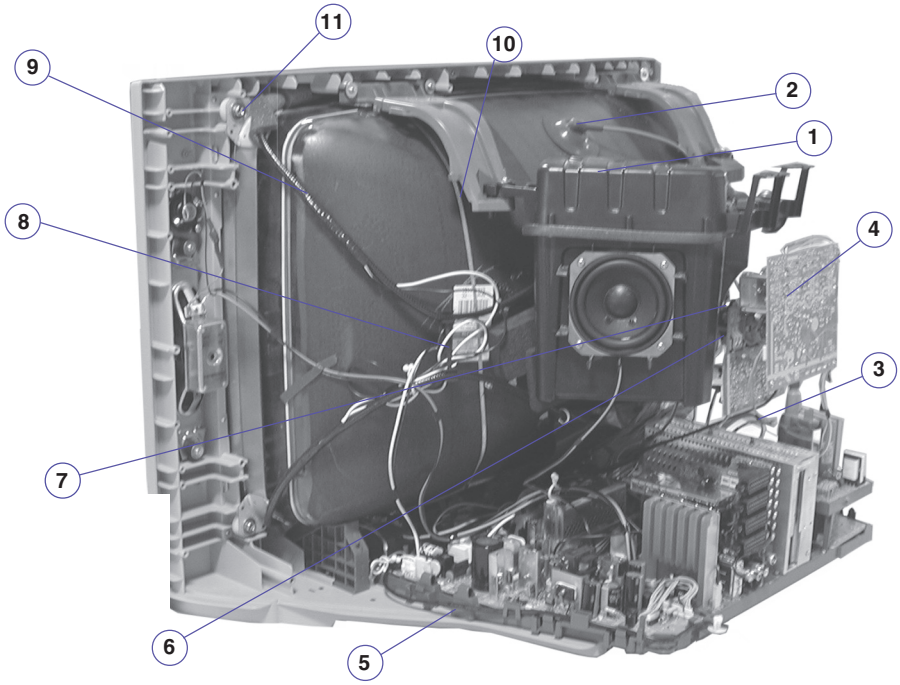

1. Remove Speaker Box assembly.
2. Discharge the anode of the CRT and remove the anode cap.
3. Unplug all interconnecting leads from the Deflection yoke, neck assy, degaussing coils and CRT grounding strap.
4. Remove the C1 Board from the CRT.
5. Remove the chassis assembly.
6. Loosen the Neck assembly fixing screw and remove.
7. Loosen the Deflection yoke fixing screw and remove.
8. Place the set with the CRT face down on a cushion and remove the Degaussing Coil holders.
9. Remove the Degaussing Coils.
10. Remove the CRT grounding strap and spring tensioners.
11. Unscrew the four CRT fixing screws [located on each CRT corner] and remove the CRT.
    [Take care not to handle the CRT by the neck.]

Removal of the Anode-Cap

REMOVAL PROCEDURE.

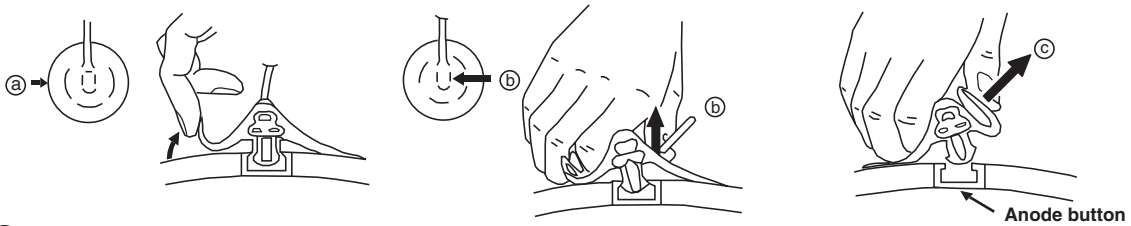

① Turn up one side of the rubber cap in the direction indicated by the arrow ⓐ

② Using a thumb pull up the rubber cap firmly in the direction indicated by the arrow ⓑ

③ When one side of the rubber cap is separated from the anode button, the anode-cap can be removed by turning up the rubber cap and pulling it up in the direction of the arrow ⓒ

How to handle the Anode-Cap

1. To prevent damaging the surface of the anode-cap do not use sharp materials.
2. Do not apply too great a pressure on the rubber, as this may cause damage to the anode connector.
3. A metal fitting called a shatter hook terminal is fitted inside the rubber cap.
4. Do not turn the rubber foot over excessively, this may cause damage if the shatter hook sticks out.

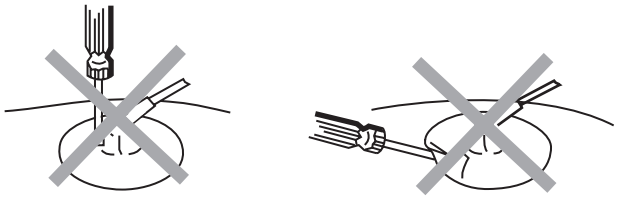

REMOVAL AND REPLACEMENT OF THE MAIN-BRACKET BOTTOM PLATES.

(1) REMOVING THE PLATES

In the event of servicing being required to the solder side of the A, D1 or G printed wiring boards, the bottom plates fitted to the main chassis bracket require to be removed.
This is performed by cutting the gates with a sharp wire cutter at the locations indicated by the arrows.

Note : There are 2 plates fitted to the main bracket and secured by 3 gates.
Only remove the necessary plate to gain access to the printed wiring board.

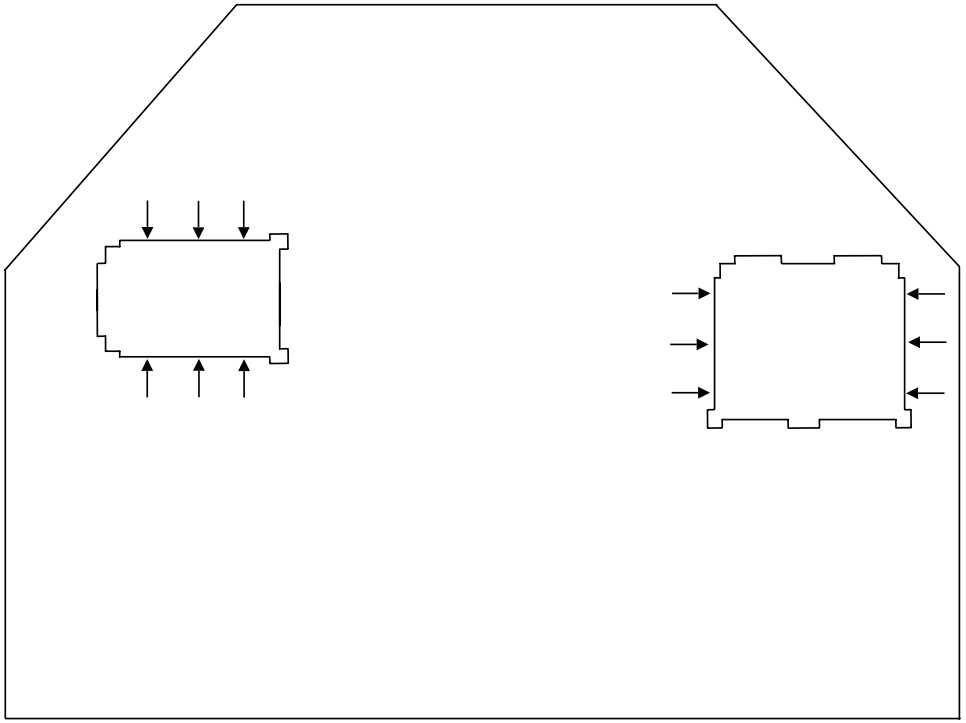

⚠ For safety reasons, on no account should the plates be removed and not refitted after servicing.

(2) REFITTING THE PLATES

Because the plates differ in size it is important that the correct plates are refitted in their original location.

Please note that the plates need to be rotated 180 degrees from their cut position to allow the tabs to be fitted into their catch positions.

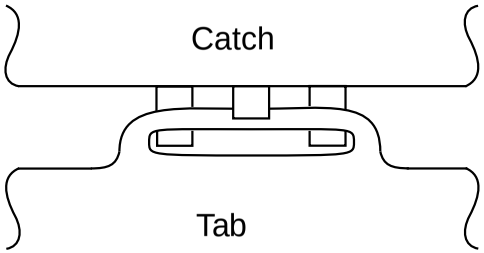

SECTION 3 SET-UP ADJUSTMENTS

- When complete readjustment is necessary or a new picture tube is installed, carry out the following adjustments.
- Unless there are specific instructions to the contrary, carry out these adjustments with the rated power supply.
- Unless there are specific instructions to the contrary, set the controls and switches to the following settings :

  Contrast ..... normal

  Brightness ..... normal

Carry out the adjustments in the following order :

3-1. Beam Landing and Geometry.
3-2. Convergence.
3-3. Focus.
3-4. White Balance.

Note : Test equipment required.
1. Color bar/pattern generator.
2. Degausser.
3. Oscilloscope.
4. Digital multimeter.

3-1. Beam Landing

Preparation :

1. In order to reduce the influence of geomagnetism on the set's picture tube, face it in an easterly or westerly direction.
2. Switch on the TV set's power and degauss with a degausser.

(1) Adjustment of Correction Magnet for Y-Splitting Axis.

1. Input a crosshatch signal from the pattern generator.
2. Set the Picture control to minimum and confirm that the Brightness control is set to normal.
3. Position the neck assembly as indicated in Fig.3-3.
4. Loosen the deflection yoke fixing screw.
5. Move the deflection yoke as far forward as is possible.
6. Adjust the upper and lower pin symmetrically by opening or closing the Y-splitting axis correction magnets located on the neck assembly. [See Fig 3-2]
7. Return the deflection yoke to its original position and re-tighten its fixing screw.

Fig.3-1

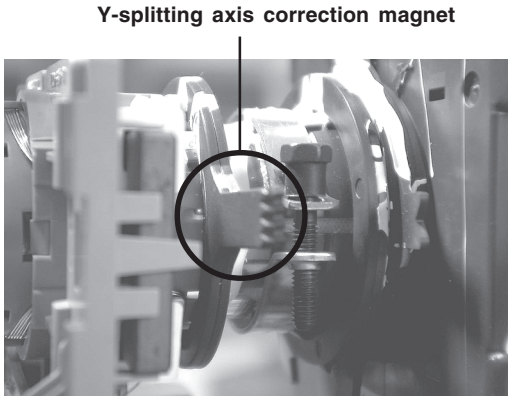

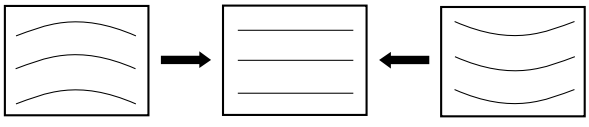

Fig.3-2

Caution :
High voltages are present on the Deflection yoke terminals - take care when handling the Deflection yoke whilst carrying out adjustments.

(2) Landing and Geometry

Note : Before carrying out the following adjustments adjust the magnets as indicated on page 18 [See Fig.3-4].
1. Input a crosshatch signal from the signal generator.
2. Rough-adjust the focus and horizontal convergence.
3. Switch from the crosshatch pattern to an all-red pattern.
4. Move the deflection yoke backwards and adjust with the purity magnet so that the red is at the centre and it aligns symmetrically [See Fig.3-5].
5. Move the deflection yoke forward to the point where the entire screen just becomes red [Mark its position].
6. Move the deflection yoke further forward until the screen just changes colour at the edges. [Mark its position].
7. Position the deflection yoke between the two marks indicated above.
8. Input a crosshatch pattern from the pattern generator and rotate the deflection yoke so that the horizontal lines are parallel with the top and bottom of the screen.
9. When the position of the deflection yoke has been determined, fasten it with its fixing screw.
10. Once dy rotation and swing left and right for h linearity is ok on cross hatch pattern, insert dy wedges. [See Fig.3-6].
11. Switch the pattern generator to green then blue and confirm the purity.
12. If the beam does not land correctly in all the corners of the screen, use disk magnets to correct it. [Confirm the corner landing for green and blue].
13. Re-check geometry for landing magnet effect. Adjust using deflection menu. [TT Mode].

Fig.3-3

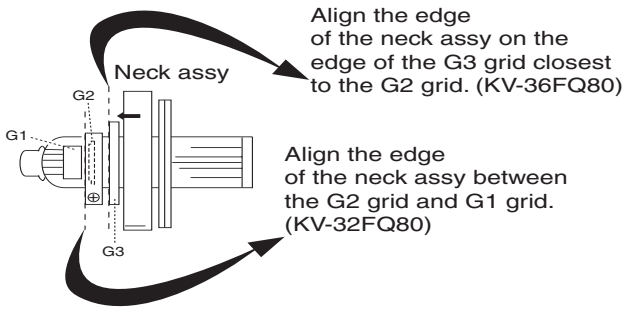

Fig.3-4

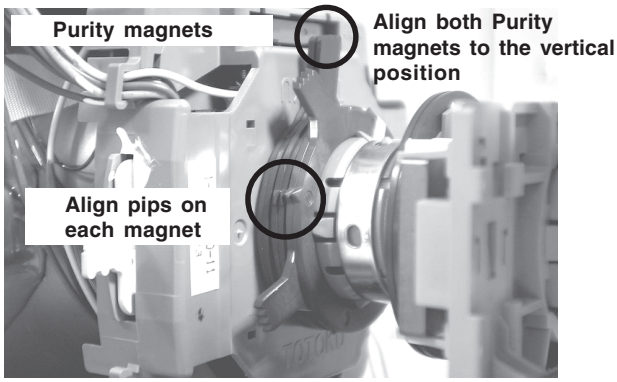

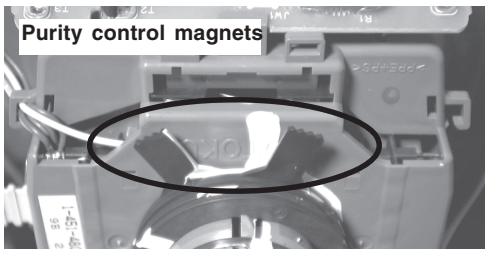

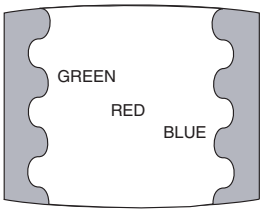

3-2. Convergence

(1) Screen centre convergence [Static convergence]

1. Input a dot pattern signal from the pattern generator.
2. Normalize the picture setting.
3. [Moving vertically], adjust the V.STAT magnet so that the vertical red, green and blue dots coincide at the centre of the screen.

Fig.3-5

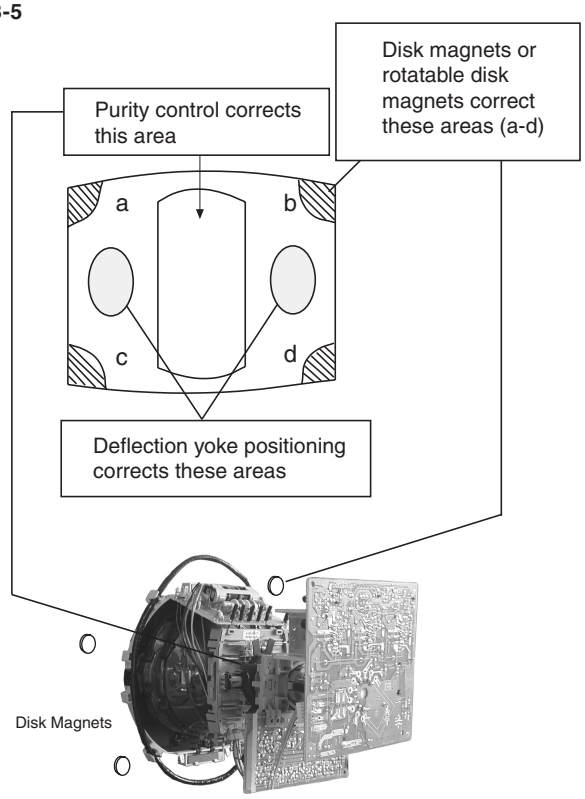

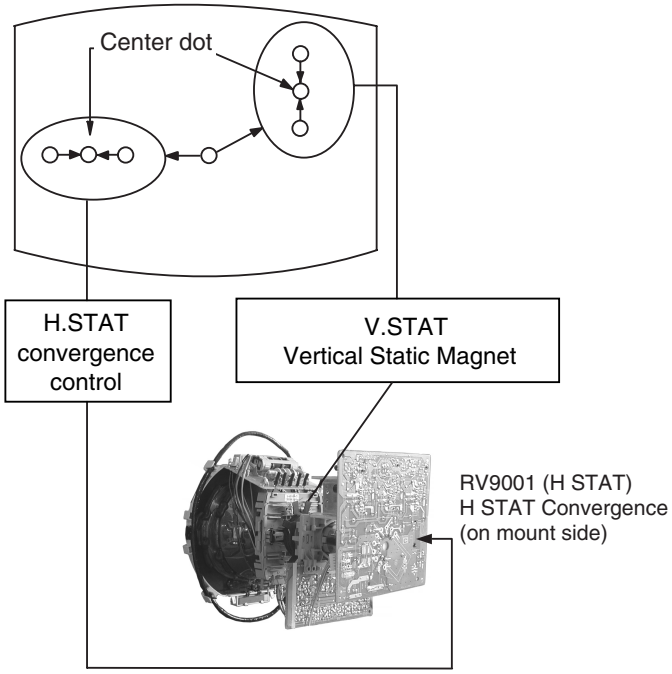

By opening or closing the V.STAT magnet, the red green and blue dots move in the direction indicated below.

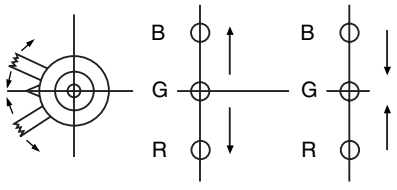

Fig.3-6

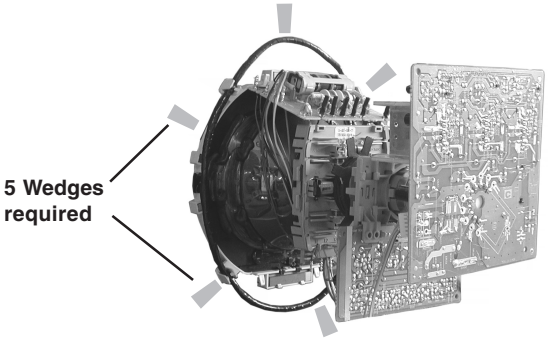

Note: Do not adjust the H.STAT by rotating the V.STAT magnets as this can affect the focus setting.

4. Correction for HMC [Horizontal mis-convergence] and VMC [Vertical mis-convergence] by using the BMC [Hexapole] magnet.

a). HMC correction by BMC [Hexapole] magnet and movement of the electron beam.

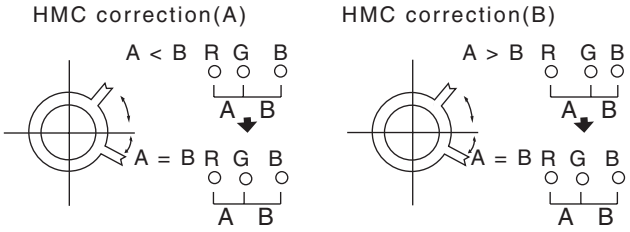

b). VMC correction by BMC [Hexapole] magnet and movement of the electron beam.

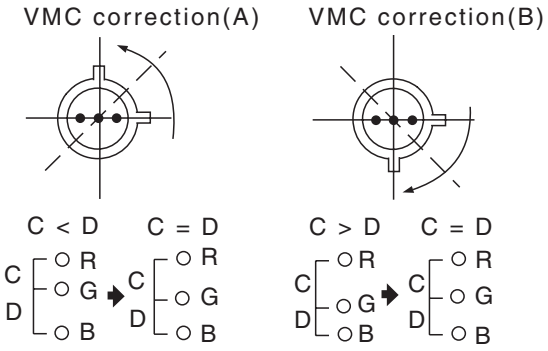

HAMP Adjustment

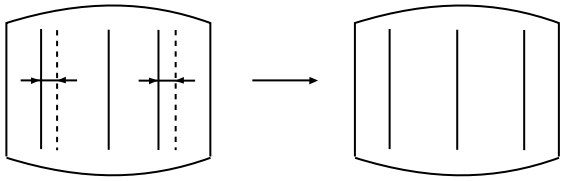

Adjust the HAMP using HAMPL and HAMPR registers in the Dynamic Convergence section of the service menu.

HTIL Adjustment

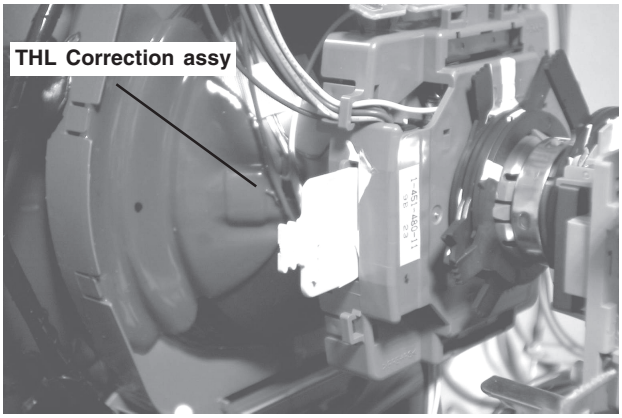

HTIL correction can be performed by adding a THL correction assembly to the Deflection yoke.

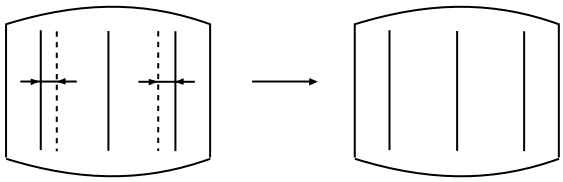

YCH Adjustment

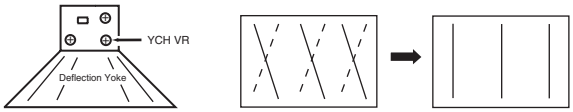

TLV Adjustment

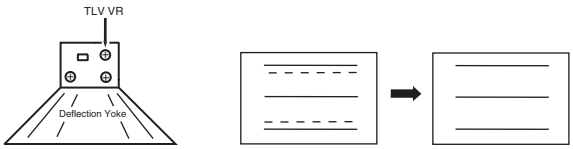

H-TRAP Adjustment

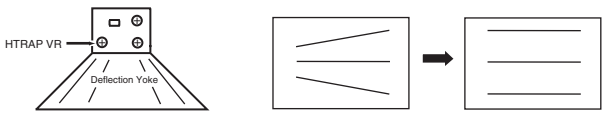

The H-TRAP should not be adjusted unless absolutely necessary as it affects the TLV settings.

Layout of each control

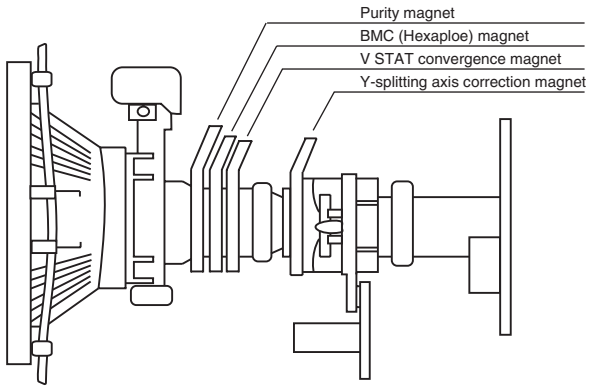

Note : If you are unable to adjust the corner convergence properly, this can be corrected with the use of permalloy magnets.

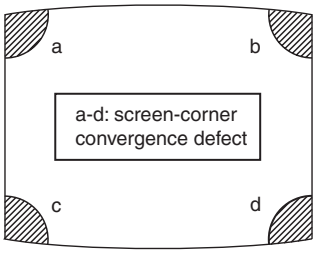

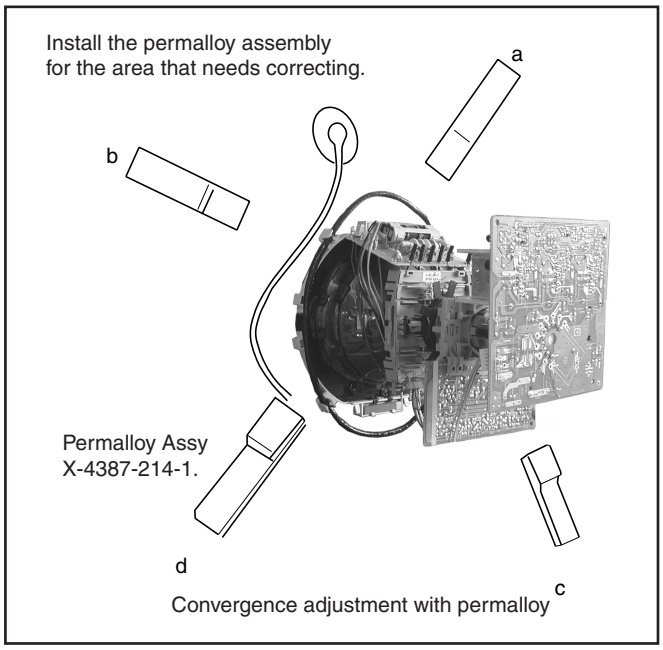

3-3. Focus Adjustment

1. Receive a cross hatch pattern from a video generator.
2. Adjust the focus control located on the flyback transformer to the best level at the centre of the screen.
3. Check left and right x-axis vertical line thickness and adjust to make them as thin as possible.
4. Considering x-axis and centre, adjust to make uniform.
5. If no cross hatch signal is possible, follow the next three steps.
6. Receive a television broadcast signal.
7. Normalize the picture setting.
8. Adjust the focus control located on the flyback transformer to obtain the best focus at the centre of the screen.
   Bring only the centre area of the screen into focus, the magenta-ring appears on the screen. In this case, adjust the focus to optimize the screen uniformly.

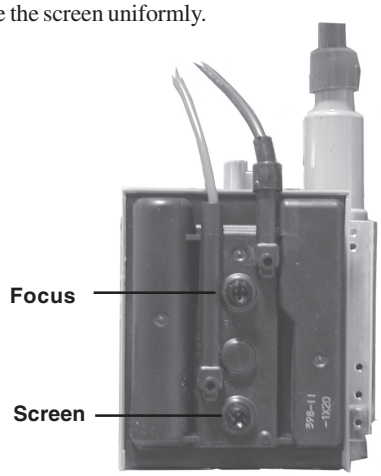

3-4. Screen (G2), White Balance

[Adjustment in the service mode using the remote commander]

G2 adjustment

1. Input a dot signal from the pattern generator.
2. Set the Picture, Brightness and Colour to minimum.
3. Apply 165V DC from an external power supply to the R, G and B cathodes of the CRT.
4. Whilst watching the picture, adjust the G2 control [SCREEN] located on the flyback transformer to the point just before the flyback return lines disappear.

White balance adjustment for TV mode

1. Input an all-white signal from the pattern generator.
2. Program the Remote Commander for operation in Service Mode. [See Page 25].
3. Enter into the 'Service Mode' by pressing 'VIDEO' button twice and 'MENU' on the Service Commander.
4. Select 'Device Register Setting' from the on screen menu display and press 'Right Arrow'.
5. Select 'Backend' from the on screen menu display and press 'Right Arrow'.
6. Set the 'Contrast' to MAX.
7. Set the 'R-Drive' to 45.
8. Adjust the 'G-Drive' and the 'B-Drive' so that the white balance becomes optimum.
9. Press the 'OK' button to write the data for each item.
10. Set the 'Contrast' to MIN.
11. Set the 'R-Cutoff' to 35.
12. Adjust the 'G-Cutoff', and the 'B-Cutoff' with the left and right buttons on the remote commander so that the white balance becomes optimum.
13. Press the 'OK' button to write the data for each item.

SECTION 4 CIRCUIT ADJUSTMENTS

4-1. Electrical Adjustments

Service adjustments to this model can be performed using the supplied remote Commander RM-936.

Programming the Remote Commander for Operation in Service Mode

1. Press the VCR/TV/DVD button until the TV LED lights.
2. Press and hold the yellow button for approx. 5 seconds until the TV LED flashes quickly.
3. Press 99999. All three LED's should light.
   The remote commander is now set to Service Mode.
4. To return the remote commander to normal operation mode repeat steps 1. and 2. then press 00000. All three LED's should light.
   The remote commander is now set to normal mode.

Setting the TV into Service Mode

1. Program the remote commander for operation in Service Mode as described above.
2. Turn on the TV main power switch.
3. Press the video standby button on the remote commander twice.
   'TT __' will appear in the upper right corner of the screen.
   Other status information will also be displayed.
4. Press 'MENU' on the remote commander twice to obtain the following menu on the screen.

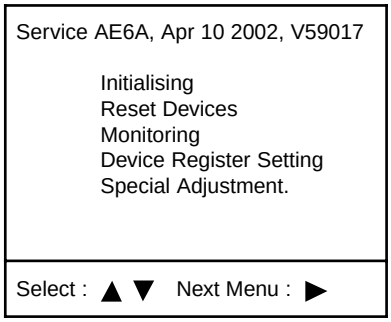

5. Move to the corresponding adjustment item using the up or down arrow buttons on the Remote Commander.
6. Press the right arrow button to enter into the required menu item.
7. Press the 'Menu' button on the Remote Commander to quit the Service Mode when all adjustments have been completed.

Note :

- After carrying out the service adjustments, to prevent the customer accessing the 'Service Menu' switch the TV set OFF and then ON.
- Certain menu items are only available in production mode.

Initialising Menu

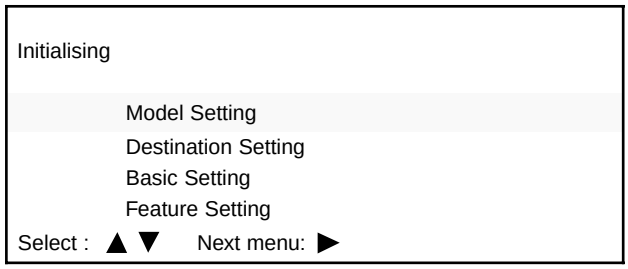

Model Setting

The menu contains a list with all the available models of this software to set up the TV set in an easy way. The selection of a model is setting data for its features and hardware resources which cannot be detected by the automatic power on H/W detection as well as a special *model byte* to get an unique model identification for models which cannot be differed by features and hardware resources (e.g. KV-29FQ76 and KV-32FQ80)

Before data is set, the user will be asked if he really wants to set a new model. If the user agrees, automatically the destination setting menu is shown.

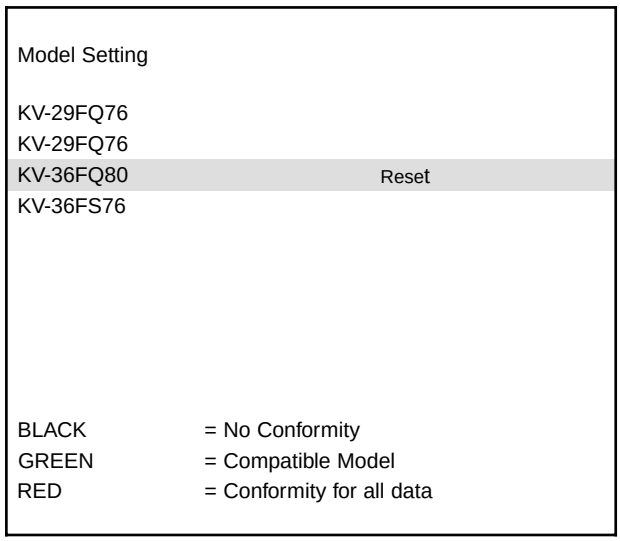

Table.4-1

Indication of Model Compatibility.

Black:
If any data does not match to specific model, the model name is displayed in black.

Green:
All data which is checked by model setting menu concurs to model except model byte.

Red:
All data which is checked by model setting menu concurs to model including model byte.

Note:
After selecting a model, it may be necessary to reset some devices to get the correct data. (Treble/Bass Offset of Sound, deflection adjustments, ...)

Basic Setting

Basic setting

No	Descr	Min	Max	Data
1	Sys.B/G	OFF	ON	ON
2	Sys.D/K	OFF	ON	ON
3	Sys.L	OFF	ON	OFF
4	Sys.I (UK)	OFF	ON	OFF
5	Sys.I (IRL)	OFF	ON	OFF
6	TXTNat.option	1	4	3
7	16:9 CRT	OFF	ON	OFF
8	Sub-woofer	OFF	ON	ON
9	Auto stand-by	OFF	ON	ON
10	Comb-filter	OFF	ON	ON
11	Auto YC det	OFF	ON	ON
12	Auto comb det	OFF	ON	ON
13	AV2 Available	OFF	ON	ON
14	AV3 Available	OFF	ON	ON
15	AV4 Available	OFF	ON	ON
16	AV5 Available	OFF	ON	ON
17	SECAM Tape	OFF	ON	OFF
18	AV1 Sound Mute	OFF	ON	ON

Table.4-2

Feature Setting

Feature setting

No	Descr	Min	Max	Data
1	PAP	OFF	ON	ON
2	PAT	OFF	ON	ON
3	INDEX	OFF	ON	ON
4	TeleText	OFF	ON	ON
5	EPG	OFF	ON	ON
6	TeleWeb	OFF	ON	OFF

Table.4-3

Device Register Setting

Backend
Deflection
Ext Deflection
Dynamic Convergence
Colour Decoder 1
Colour Decoder 2
Audio / Video Switch
Mid - X
External PLL Mid - X
Sound
Digital NR

Table.4-4

Audio / Video Switch

No	Descr	Def	Min	Max	Data
1	CVOUT1	0	0	9	0
2	CVOUT2	2	0	9	0
3	LO0 CTRL	OFF	OFF	ON	OFF
4	LO1 CTRL	OFF	OFF	ON	OFF
5	YCOUT 1	2	0	7	2
6	YCOUT 2	0	0	7	0
7	ZCD SW	OFF	OFF	ON	OFF
8	AOUT3MUTE	OFF	OFF	ON	OFF
9	AOUT 1	3	0	7	3
10	AOUT 2	1	0	7	1
11	GROUP DEL	16	0	31	16
12	AOUT 3	3	0	7	3
13	AOUT3VOLC	4	0	7	4
14	AOUT3VOLF	4	0	7	4
15	AOUT3 L/R	0	0	3	0
16	GD1 SW	ON	OFF	ON	ON
17	GD2 SW	ON	OFF	ON	ON
18	SYNC1	1	0	1	1
19	SYNC2	1	0	1	1
20	SCONT 1	3	2	3	3
21	VIDEO 1	4	0	3	4
22	AUDIO 1	0	0	3	0
23	SCONT 2	2	2	3	2
24	VIDEO 2	4	0	3	4
25	AUDIO 2	0	0	3	0
26	SCONT 3	2	2	3	2
27	VIDEO 3	0	0	3	0
28	AUDIO 3	1	0	3	1

Table.4-5

Ext. Deflection

No	Descr	Def	Min	Max	Data
1	DF Phase	185	0	255	185
2	DQP Phase	125	0	255	125
3	Mid Linear	135	0	255	135
4	H Linear	100	0	255	120
5	DQP ac amp	150	0	255	132
6	DQP dc lvl	148	0	255	126
7	H Cent 36"	0	0	255	80

Table.4-6

Mid-X

No	Descr	Def	Min	Max	Data
1	M H POS	0	-16	16	0
2	S H POS	0	-8	8	0
3	D YS SEL	1	0	3	1
4	D YS DELAY	7	0	7	7
5	D SYNC MOD	ON	OFF	ON	ON
6	Text Sharp	OFF	OFF	ON	OFF
7	Ext. PLL	OFF	OFF	ON	OFF
8	H Filter	OFF	OFF	ON	OFF

Table.4-7

Colour Decoder 1

No	Descr	Def	Min	Max	Data
1	CLK SEL	0	0	3	0
2	SYS CLK	ON	OFF	ON	ON
3	DSP CLK	3	0	3	3
4	DEL	OFF	OFF	ON	OFF
5	PLL	OFF	OFF	ON	OFF
6	REF CLK	1	0	3	1
7	AD SEL	0	0	3	0
8	DCLP ON	OFF	OFF	ON	OFF
9	CLP OFF	OFF	OFF	ON	OFF
10	COMB SEL	OFF	OFF	ON	OFF
11	AW OFF	OFF	OFF	ON	OFF
12	SYS MODE	0	0	15	0
13	SIG FORM	12	0	15	12
14	CLIP LEV	0	0	3	0
15	Y NR	0	0	3	0
16	C NR	0	0	3	0
17	BLK MODE	2	0	3	2
18	Y LEV	102	0	255	102
19	C LEV	108	0	255	108
20	OSD LEV	0	0	3	0
21	OSD RES	OFF	OFF	ON	OFF
22	SHP COR	0	0	3	0
23	FUP2	1	0	3	1
24	YC DLY ADJ	6	0	15	6
25	A PED	0	0	3	0
26	DC TRAN	0	0	3	0
27	SUB SHP	9	0	15	9
28	Y EQ	3	0	7	3
29	SHP FO	ON	OFF	ON	ON
30	APDATK	0	0	3	0
31	APDHLD	0	0	3	0
32	APDAREA	0	0	3	0
33	APDHIS	0	0	3	0
34	DCTRTC	0	0	3	0
35	DCLP TC	0	0	3	0
36	CLP POS	7	0	15	7
37	C EQ	0	0	3	0
38	C BPF	0	0	3	0
39	CDIF TRAP	OFF	OFF	ON	OFF
40	SSEP TC	OFF	OFF	ON	OFF
41	INT COMB	0	0	3	0
42	SUB HUE	7	0	15	7
43	CLP GR LIN	0	0	3	0
44	CLP ADAP G	OFF	OFF	ON	OFF
45	HS SLICE	0	0	3	0
46	VS SLICE	1	0	3	1
47	STIP TC	1	0	3	1
48	SYNC LPF	ON	OFF	ON	ON
49	SYNC FIL	OFF	OFF	ON	OFF
50	AFC GAIN	1	0	3	1
51	LOW GAIN	1	0	3	1
52	AFC SPDUP	ON	OFF	ON	ON
53	LOW CO	ON	OFF	ON	ON
54	HIGH CO	0	0	3	0
55	CD MODE1	0	0	3	0
56	CD MODE2	OFF	OFF	ON	OFF

Table.4-8

Colour Decoder 1 (cont)

No	Descr	Def	Min	Max	Data
57	CD MODE3	OFF	OFF	ON	OFF
58	HS POS	5	0	15	5
59	NTHRLND	OFF	OFF	ON	OFF
60	SLICE LEV	0	0	31	0
61	UPAREA	OFF	OFF	ON	OFF
62	UPTHIN	OFF	OFF	ON	OFF
63	X149J	OFF	OFF	ON	OFF
64	DM STC	OFF	OFF	ON	OFF
65	IN ST	OFF	OFF	ON	OFF
66	UP R LVL	ON	OFF	ON	ON
67	OFS LVL	OFF	OFF	ON	OFF
68	SLO FST	OFF	OFF	ON	OFF
69	FROM 43	2	0	3	2
70	FROMWIDE	2	0	3	2
71	FR TITLES	2	0	3	2
72	LPF L	ON	OFF	ON	ON
73	AW RESET	OFF	OFF	ON	OFF
74	DTO SLOPE1	0	0	255	0
75	DTO SLOPE2	0	0	255	0
76	DTO SLOPE3	0	0	255	0
77	SETUP CANC	0	0	15	0
78	V INT	7	0	15	7
79	EXT CLP PH	0	0	63	0
80	TEST OUT	OFF	OFF	ON	OFF
81	COL SYSTEM	8	0	15	8
82	RGB MODE	2	0	3	2
83	YSSEL	OFF	OFF	ON	OFF
84	N DET	OFF	OFF	ON	OFF
85	V ENHANCE	4	0	7	4
86	PNR	OFF	OFF	ON	OFF
87	V FREQ	0	0	3	0
88	N COMB	OFF	OFF	ON	OFF
89	AUTO SW	OFF	OFF	ON	OFF
90	SECAM TRAP	OFF	OFF	ON	OFF
91	BELL MODE	OFF	OFF	ON	OFF
92	SECAM KIL	1	0	3	1
93	ID POS	2	0	3	2
94	ID WID	ON	OFF	ON	ON
95	E-COL SYS	OFF	OFF	ON	OFF
96	E-INPUT	OFF	OFF	ON	OFF
97	E-HLOCK	OFF	OFF	ON	OFF
98	E-V FREQ	ON	OFF	ON	ON
99	E-WSS	OFF	OFF	ON	OFF
100	INT RESET	OFF	OFF	ON	OFF
101	SRC2SW	0	0	3	0
102	COMBSW	0	0	3	0
103	RGBSW	OFF	OFF	ON	OFF
104	SECAM BLK	1	0	3	1
105	V ENH LVL	1	0	3	1
106	SCMCDLY	OFF	OFF	ON	OFF
107	SCMID	OFF	OFF	ON	OFF
108	SCMADP	ON	OFF	ON	ON
109	KILL TIME	OFF	OFF	ON	OFF
110	KILL LVL	2	0	3	2
111	KN POS	5	0	7	5
112	KD WID	7	0	15	7

Table.4-9

Colour Decoder 2

No	Descr	Def	Min	Max	Data
1	TINT	31	0	63	31
2	P/N GW	OFF	OFF	ON	OFF
3	P/N ID	OFF	OFF	ON	OFF
4	SUB COLOUR	7	0	15	7
5	SUB CONTR	8	0	15	8
6	SHARP FO	1	0	3	1
7	SHARP EQ	2	0	3	2
8	SHARP GAIN	8	0	15	8
9	Y-OUT LEV.	45	0	63	38
10	BS POINT	0	0	3	0
11	C-OUT LEV.	38	0	63	38
12	DC REST	0	0	3	0
13	BPF FO	1	0	3	1
14	BPF Q	1	0	3	1
15	FILTER SW	OFF	OFF	ON	OFF
16	C-TRAP SW	0	0	1	0
17	S-D TRAP	ON	OFF	ON	ON
18	LPF	ON	OFF	ON	ON
19	Y-DL	4	0	10	4
20	N-COMB	ON	OFF	ON	ON
21	VIDEO SEL	0	0	15	0
22	RGB SEL	0	0	3	0
23	HALF TONE	OFF	OFF	ON	OFF
24	Cr OFF. 1	7	0	15	7
25	Cb OFF. 1	7	0	15	7
26	Cr OFF. 2	7	0	15	7
27	Cb OFF. 2	7	0	15	7
28	V CD FREQ	3	0	7	3
29	V CD MODE	1	0	3	1
30	AFC SENS	1	0	3	1
31	MVM	OFF	OFF	ON	OFF
32	S R-Y ADJ	6	0	15	6
33	S B-Y ADJ	4	0	15	4
34	BELL/HPF	2	0	3	2
35	BELL FO	OFF	OFF	ON	OFF
36	S GP	2	0	3	2
37	S ID	OFF	OFF	ON	OFF
38	RGB1 ENB	OFF	OFF	ON	OFF
39	HS-PH	0	0	1	0
40	Auto SW	1	0	1	1
41	C-ID	1	0	1	1
42	VP-PH	0	0	1	0
43	S/N RATIO	3	0	3	3

Table.4-10

Digital NR

No	Descr	Def	Min	Max	Data
1	NR Table	0	0	7	0
2	Lcc1	0	0	63	0
3	Lcc2	0	0	63	0
4	Lcc3	0	0	63	0
5	UVLim_Sel	0	0	7	0

Table.4-11

Backend

No	Descr	Def	Min	Max	Data
1	R-on	ON	OFF	ON	ON
2	G-on	ON	OFF	ON	ON
3	B-on	ON	OFF	ON	ON
4	D-col	0	0	3	0
5	Wb-Sw	OFF	OFF	ON	OFF
6	Gamma-L	OFF	OFF	ON	OFF
7	Contrast	40	0	63	40
8	BLK-Bottom	3	0	3	3
9	Hue	28	0	63	26
10	Colour-Axis	1	0	3	1
11	Colour	31	0	63	31
12	CTI-Level	2	0	3	2
13	Brightness	25	0	63	25
14	S-Abl	0	0	3	0
15	Sharpness	25	0	63	25
16	LTI-Level	0	0	3	0
17	R-Drive	35	0	63	35
18	PLimit	0	0	3	0
19	G-Drive	41	0	63	41
20	ABL-Mode	0	0	3	0
21	B-Drive	41	0	63	41
22	CTI-Mode	0	0	3	0
23	Sub Bright	6	0	63	6
24	Gamma	1	0	3	1
25	R-Cutoff	31	0	63	31
26	LTI-Mode	1	0	3	1
27	G-Cutoff	27	0	63	27
28	DPIC-Level	1	0	3	1
29	B-Cutoff	31	0	63	31
30	DC-Tran	1	0	3	1
31	Sub-Cont	8	0	15	8
32	LRGB2-Lvl	8	0	15	8
33	P-Abl	15	0	15	15
34	ABL-TH	0	0	15	0
35	CB-Off. P	32	0	63	54
36	CR-Off. P	29	0	63	11
37	CB-Off. S	54	0	63	63
38	CR-Off. S	1	0	63	63
39	Aging-W	OFF	OFF	ON	OFF
40	Aging-B	OFF	OFF	ON	OFF
41	System	1	0	3	1
42	Y-offset	7	0	15	7
43	VM-Level	1	0	3	1
44	Sharp. FO	ON	OFF	ON	ON
45	CD-Off	OFF	OFF	ON	OFF
46	Sharp. CD	2	0	3	2
47	Sharp. FI	0	0	3	0
48	Pre/Over	2	0	3	2
49	VM-Cor	0	0	3	0
50	VM-FO	2	0	3	2
51	VM-Limit	3	0	3	3
52	VM-Delay	2	0	3	2
53	Sub Colour	0	-8	8	0

Table.4-12

Deflection System Adjustment

1. Enter into the service mode and select 'Deflection' from the menu. The 'Deflection' adjustment menu will be displayed.
2. Select and adjust each item to obtain the optimum image.

Deflection

No	Descr	Def	Min	Max	Data
1	H-Size	34	0	63	34
2	H-Position	25	0	63	36
3	V-Size	31	0	63	51
4	V-Position	31	0	63	28
5	Pin-Amp	18	0	63	16
6	Up-CPin	37	0	63	41
7	Lo-CPin	37	0	63	40
8	AFC-Bow	31	0	63	27
9	AFC-Angle	31	0	63	28
10	Pin-Phase	28	0	63	25
11	V-Lin	7	0	15	8
12	S-Corr	8	0	15	12
13	Rotation-1	1	0	3	1
14	Rotation-2	15	0	15	15
15	H-Trap	15	0	31	1
16	H Linear	100	0	255	120
17	HC-Par-Amp	38	0	63	36
18	MP-Par-Amp	9	0	15	7
19	UpPin Axis	2	0	3	3
20	LoPin Axis	2	0	3	3
21	UpPin Gain	1	0	3	3
22	LoPin Gain	1	0	3	2
23	Akb-Tim	15	0	31	15
24	BLK-Off	ON	OFF	ON	OFF
25	AKB-Off	OFF	OFF	ON	OFF
26	Up-Blk	4	0	15	0
27	Lo-Blk	9	0	15	0
28	V-On	ON	OFF	ON	ON
29	Ew-Dc	OFF	OFF	ON	OFF
30	Uc-Pol	OFF	OFF	ON	OFF
31	Vblk-Sw	ON	OFF	ON	OFF
32	Sync-Phase	0	0	3	0
33	AFC-Mode	2	0	3	2
34	Rst-Sw	OFF	OFF	ON	OFF
35	Left-Blk	52	0	63	52
36	Clp-Phase	3	0	3	3
37	Right-Blk	30	0	63	30
38	Clp-Gate	OFF	OFF	ON	OFF
39	Hblk	ON	OFF	ON	ON
40	V-Aspect	47	0	63	47
41	Zoom-Sw	OFF	OFF	ON	OFF
42	Jmp-Sw	OFF	OFF	ON	OFF
43	V-Scroll	31	0	63	31
44	V-Freq	2	0	3	2
45	Up-Vlin	0	0	15	0
46	Lo-Vlin	0	0	15	0
47	V-Comp	0	0	15	6
48	H-Comp	0	0	15	0
49	VSaw1-Dc	7	0	15	7
50	Pin-Comp	7	0	7	4
51	VSaw1-Amp	0	0	31	0
52	AFC-Comp	0	0	7	0
53	MP-Par-Dc	13	0	15	15
54	HC-Par-Dc	63	0	63	31
55	Asp-Sw	OFF	OFF	ON	OFF
56	VDrv-SW	OFF	OFF	ON	OFF
57	HC-Par-Pha	31	0	63	31

Table.4-13

4-2. Volume Electrical Adjustments

Sub Colour Adjustment

1. Input a PAL colour bar signal.
2. Connect an oscilloscope to CN9001 pin 5 located on the C1 Board.
3. Enter into the 'Service Mode'.
4. Choose 'Backend' from the menu.
5. Adjust 'Sub Colour' data so that the right sides of the waveform are of equal height.

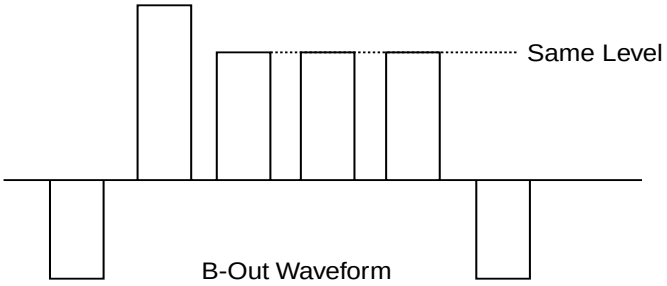

B-Out Waveform

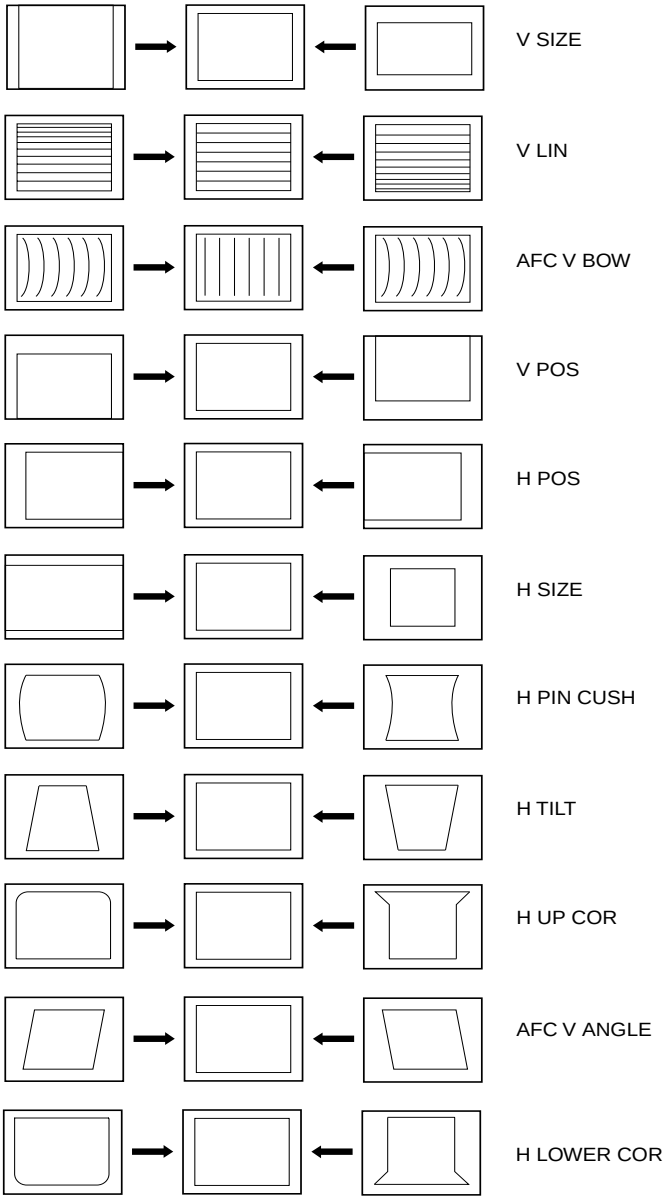

4-3. TEST MODE 2:

Is available by pressing the 'TEST' button twice, OSD 'TT' appears. The functions described below are available by selecting the two numbers. To release the 'Test mode 2', press 0 twice, press the TV button or switch the TV set into Stand-by mode. Pressing the two Local Control buttons (+ and -) during power ON will also switch into 'TT' mode or from standby mode press OSD, 5, volume plus, TV.
In 'TT' mode, it is possible to remove the Menu from the screen by pressing the Speaker Off button once. Pressing the Speaker OFF button a second time will cause the Menu to reappear. The function is kept even when the menu is not displayed on screen !!.

00	'TT' mode off
01	Picture maximum
02	Picture minimum
03	Set speaker/headphone Volume to 30%
04	Set speaker/headphone Volume to 50%
05	Set speaker/headphone Volume to 65%
06	Set speaker/headphone Volume to 80%
07	Ageing mode
08	Shipping Condition
09	No action
10	No action
11	Sub picture adjustment
12	Sub colour adjustment
13	Sub brightness adjustment
14	No action
15	Picture rotation automatic function
16	Picture level 50%
17	Production monitor
18	No action
19	Production mode enable/disable
20	No action
21	Destination A, D, E, display TV status
22	Destination B, Multi, display TV status
23	Destination A, D, E, display TV status
24	Destination U, display TV status
25	Destination A, D, E, display TV status
26	Destination B, Multi, display TV status
27	Destination K, display TV status
28	Destination R, display TV status
29	Geometry adjustment 1
30	No action
31	Autostandby enable/disable
32	Geometry adjustment 2
33	No action
34	Screen mode test
35	CRT 4:3 <-> 16:9, TV status
36	Velocity modulation
37	No action
38	DRC mode set to DRC 100
39	DRC mode set to DRC 50
40	No action
41	Reinitialise NVM
42	Geometry adjust 3
43	Dual A sound
44	Dual B sound
45	Mono sound
46	Stereo sound
47	No action
48	Set NVM as non-virgin
49	Set NVM as virgin
50	No Action

51	Virtual dolby on/off
52	OSD mute on/off
53	Reset EPG services in NVM
54	Index check
55	Internal software use only
56	Focus phase adjust
57	Focus DC level adjust
58	Copy internal NVM to external NVM on service connector
59	Copy external NVM on service connector to internal NVM
60	No Action
61	Smartlink test
62	System L audio from baseband (toggle)
63	Copy the picture reset data from ROM into the picture reset location of NVM
64	Copy the actual adj picture data from NVM into the picture reset location of NVM
65	Reset errors
66	Ignore errors (toggle)
67	Reserved for IDTV (Manual EMMA Recovery)
68	No action
69	Personal ID reset
70	No action
71	Force PAL
72	Unforce PAL
73	No action
74	No action
75	Pin Amp/UC Pin adjust
76	LC Pin/Trap adjust
77	Reset deflection offsets
78	Balance left
79	Balance right
80	No action
81	Reserved for IDTV (Digital BER display On/Off - only in digital mode)
82	Reserved for IDTV (AV monitor mode On/Off - only in digital mode)
83	Reserved for IDTV (2K, 8K, 2k & 8K toggle - only in digital mode)
84	Reserved for IDTV (Set digital NVM default - only in digital mode)
85	Reserved for IDTV
86	Reserved for IDTV (Digital model setting (AE6D/FE2D) toggle - only in digital mode)
87	Local keys test
88	Reserved for IDTV (Digital shipping condition (clear tune database) - only in digital mode)
89	Reserved for IDTV
90	No action
91	14:9 mode
92	Smart mode
93	16:9 mode
94	Zoom mode
95	4:3 mode
96	Reserved for IDTV (TS path switch (tuner/CI slot) - only in digital mode)
97	Reserved for IDTV (CTI mode - only in digital mode)
98	Reserved for IDTV (Auto EMMA recovery enable/disable)
99	Display error monitor

5-1. BLOCK DIAGRAMS (1)

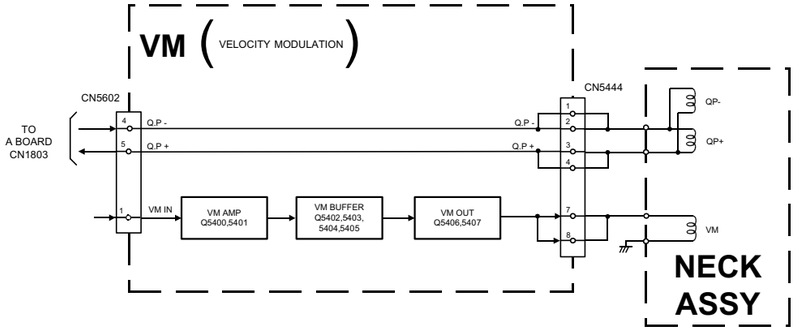

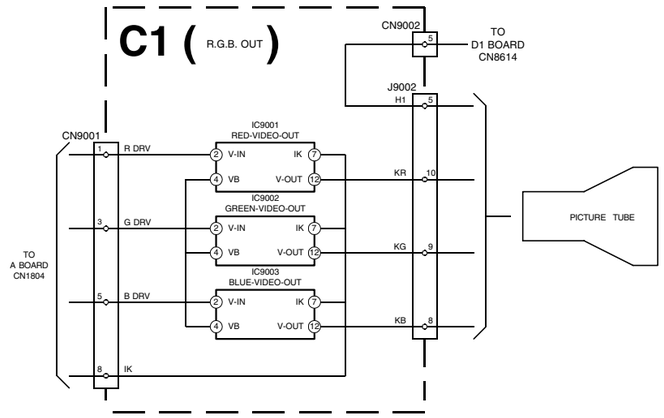

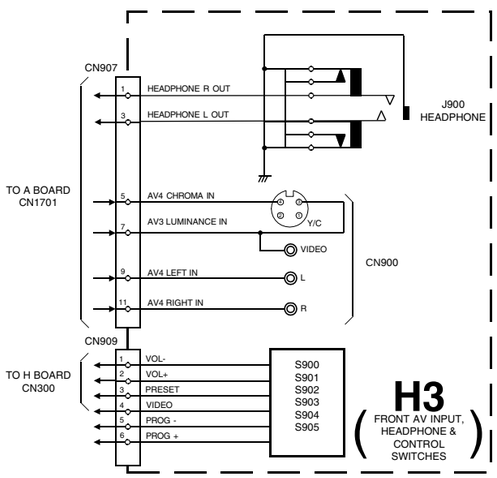

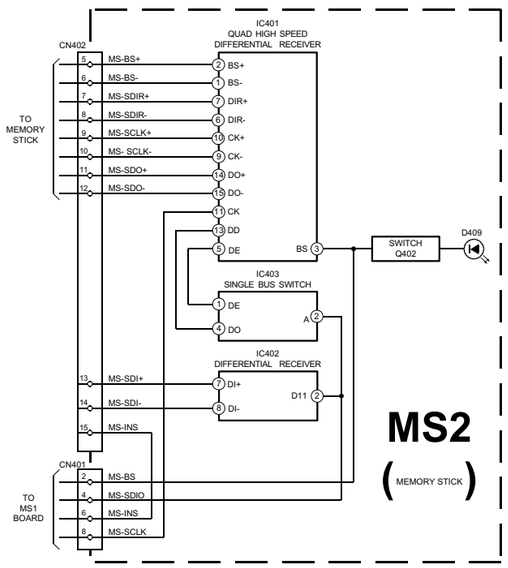

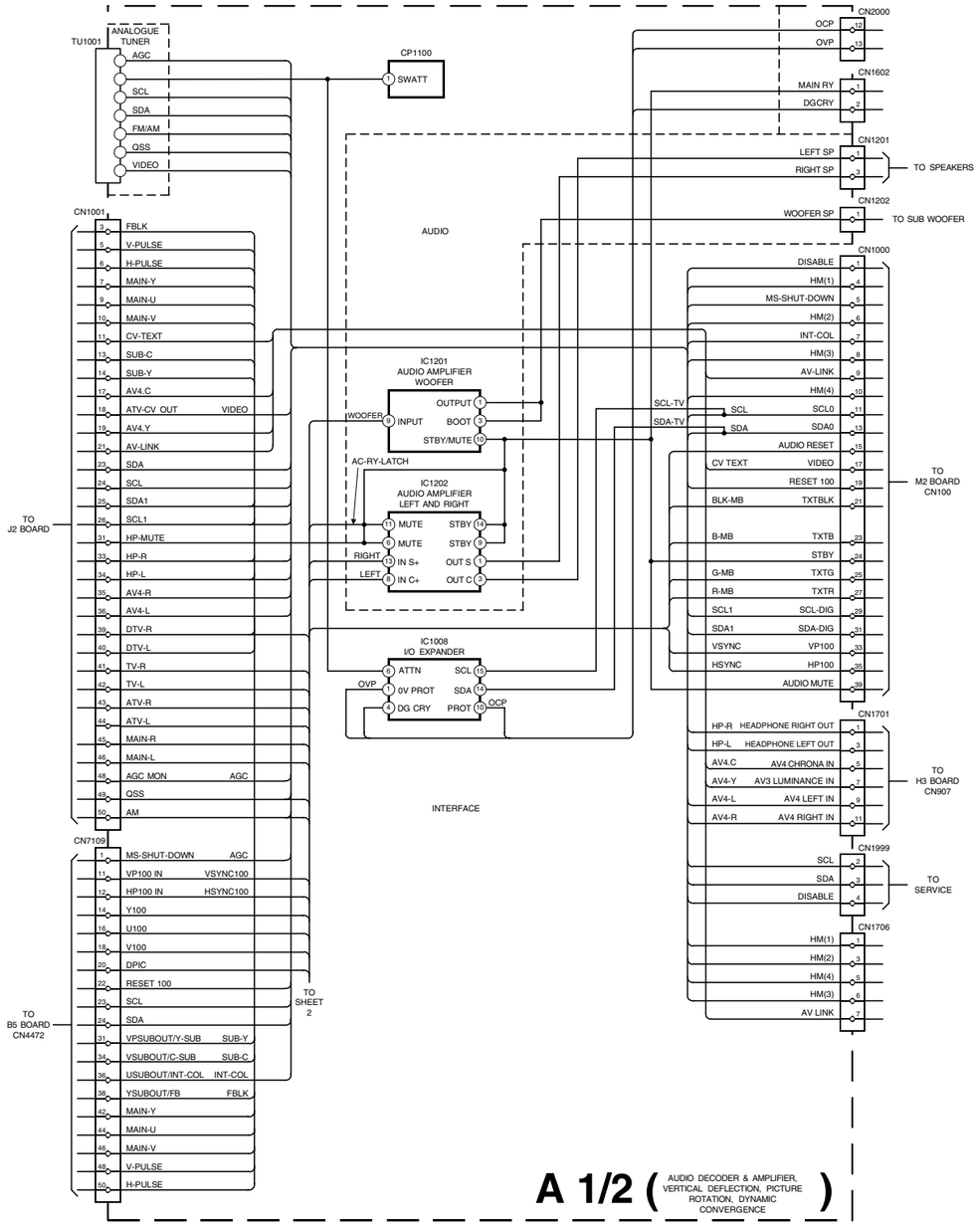

5-1. BLOCK DIAGRAMS (2)

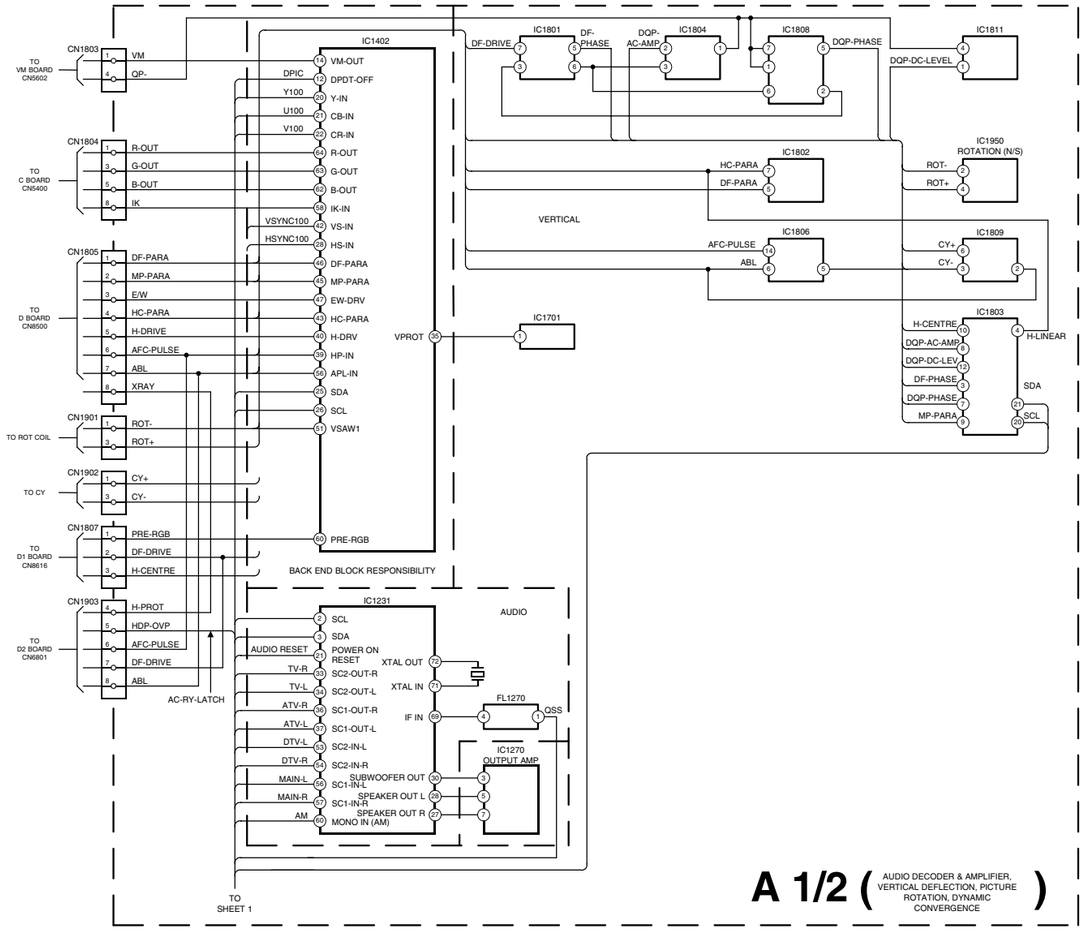

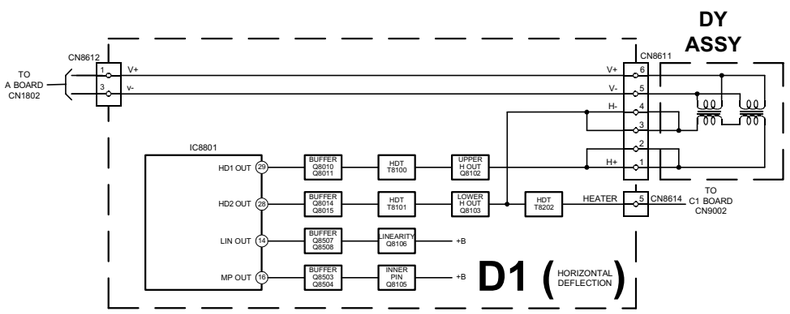

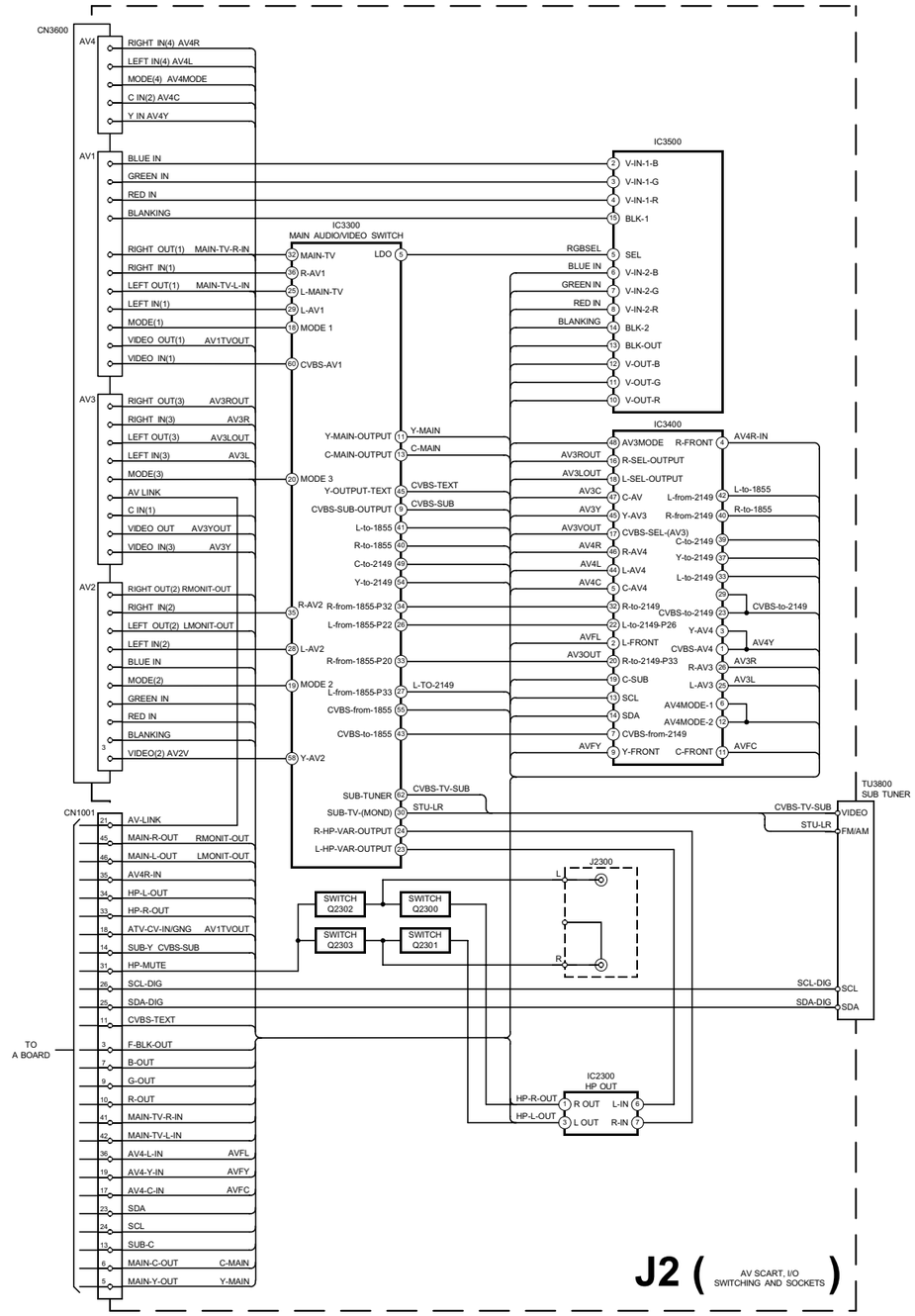

5-1. BLOCK DIAGRAMS (3)

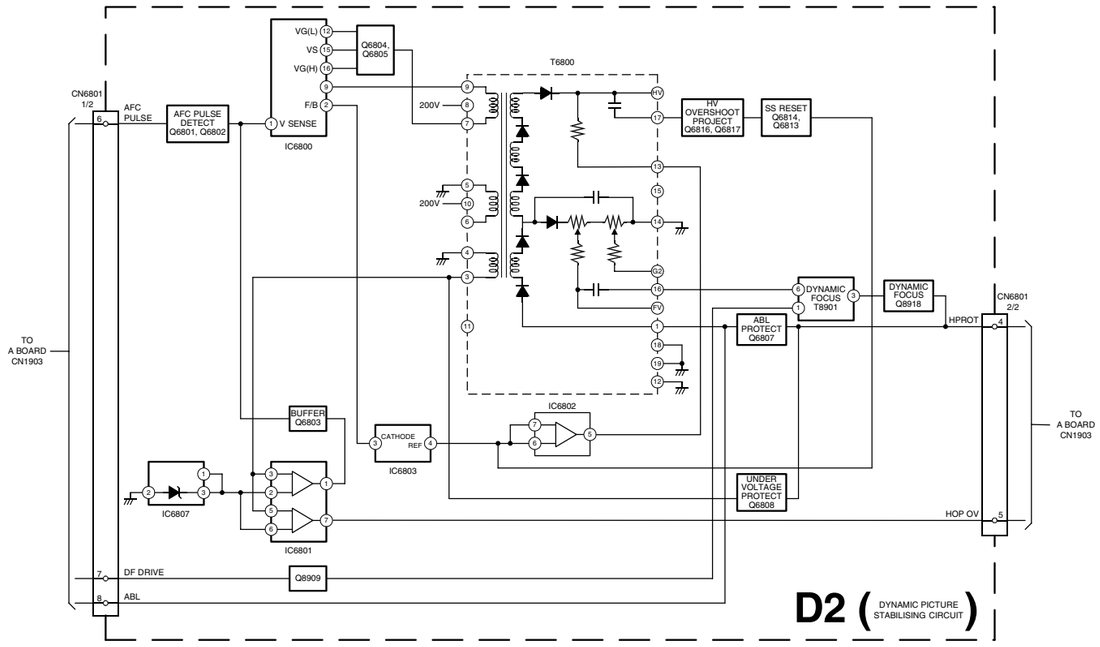

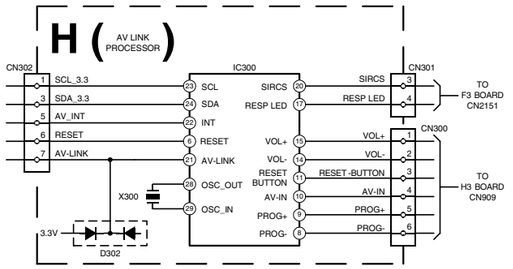

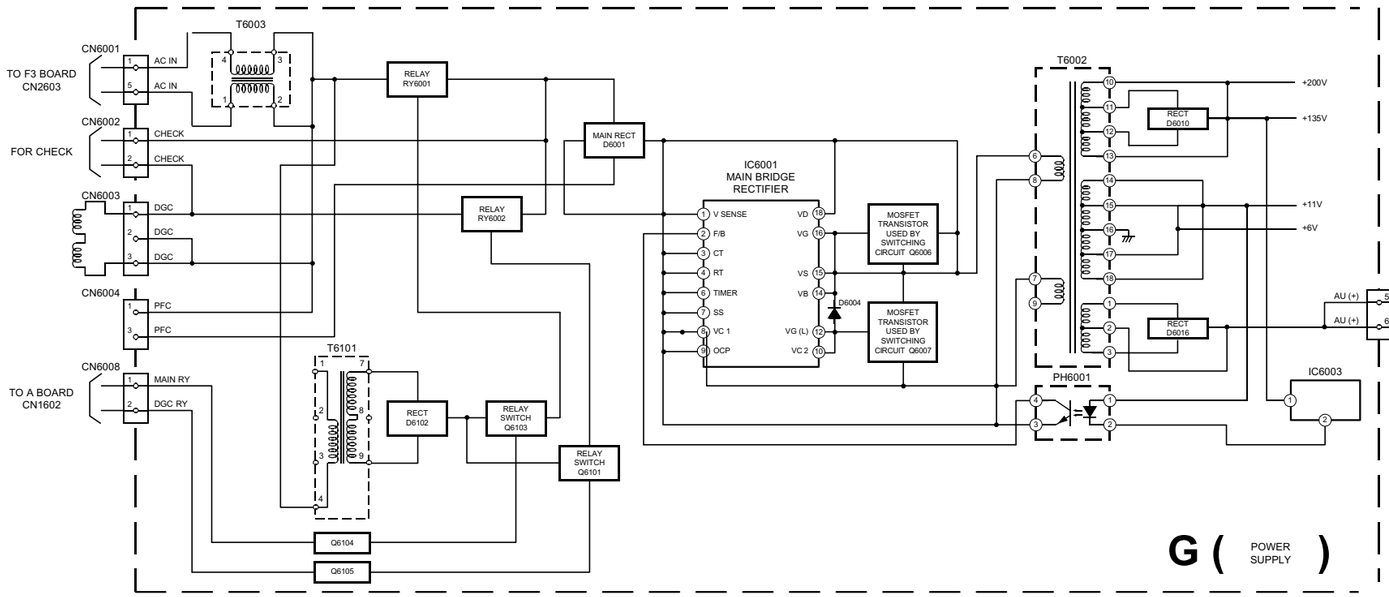

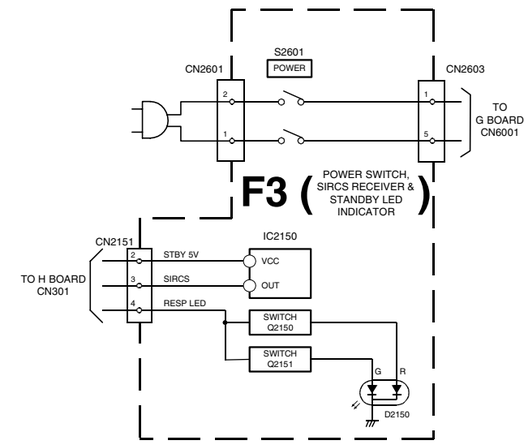

5-1. BLOCK DIAGRAMS (4)

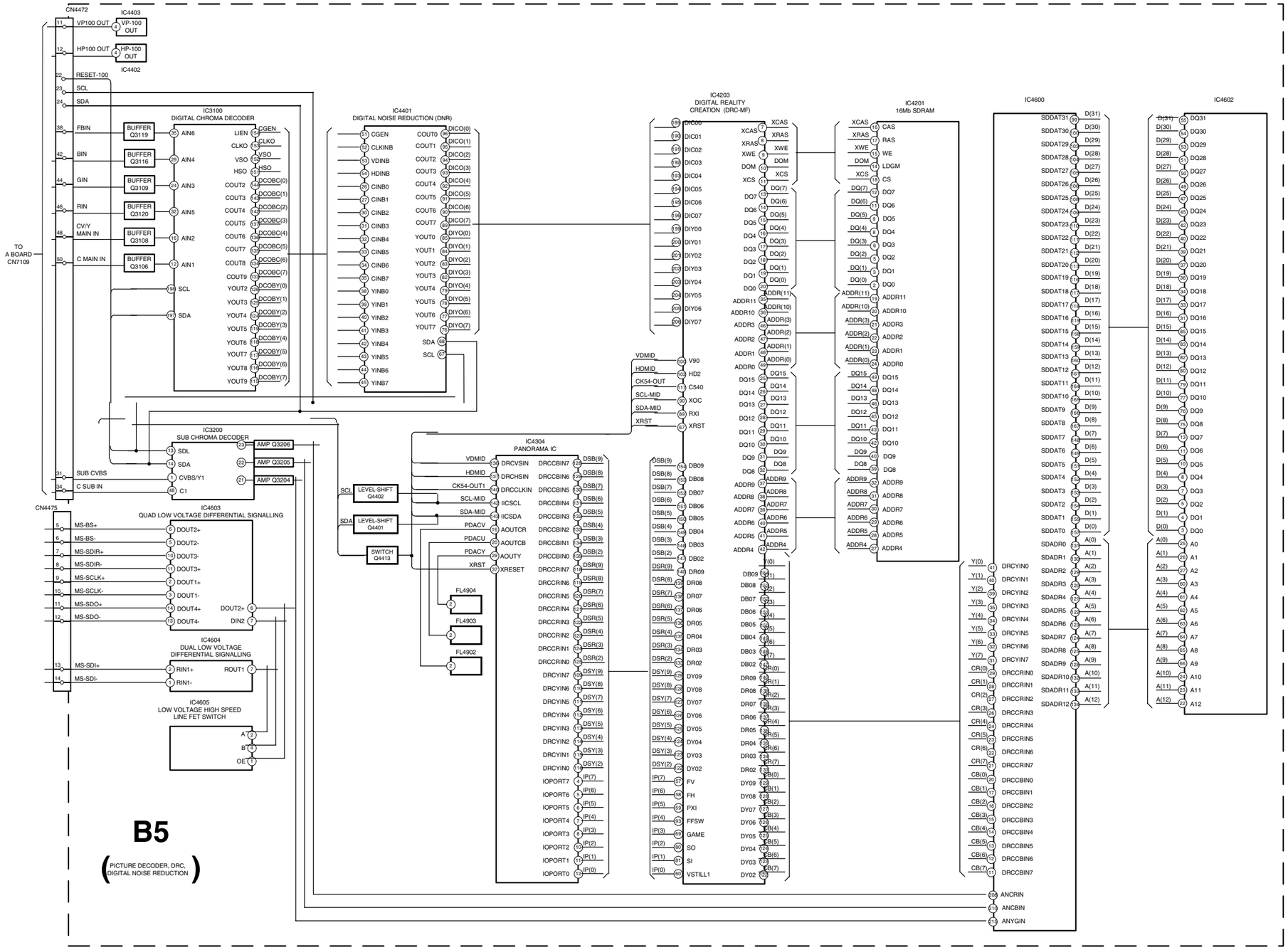

5-1. BLOCK DIAGRAMS (5)

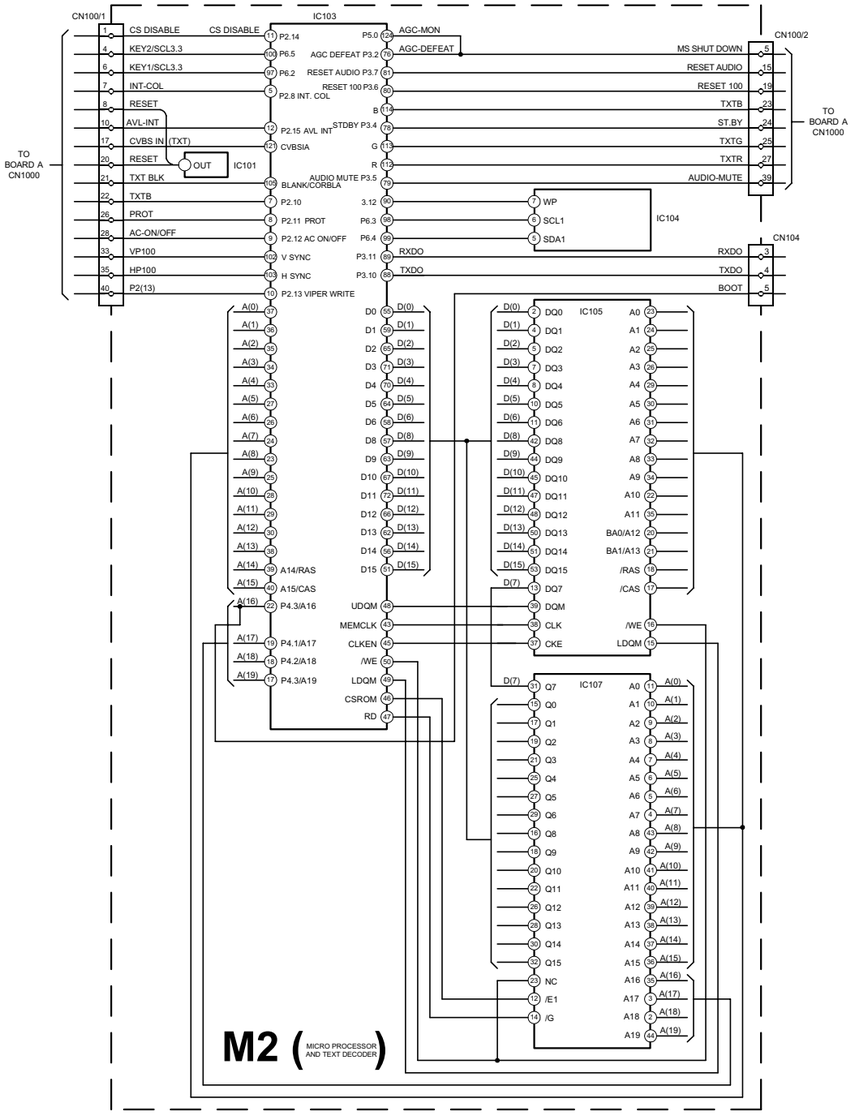

5-2. CIRCUIT BOARD LOCATION

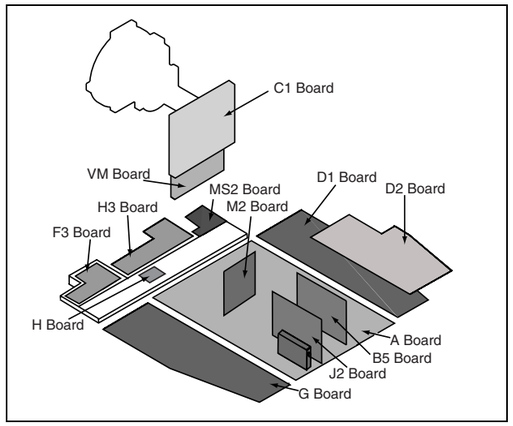

5-3. SCHEMATIC DIAGRAMS AND PRINTED WIRING BOARDS

Note :

- All capacitors are in µF unless otherwise noted.
- pF : µµF 50WV or less are not indicated except for electrolytic types.
- Indication of resistance, which does not have one for rating electrical power, is as follows.

Pitch : 5mm
Electrical power rating : 1/4W

- Chip resistors are 1/10W
- All resistors are in ohms.
  k = 1000 ohms, M = 1000,000 ohms
- : nonflammable resistor.
- : fusible resistor.
- : internal component.
- : panel designation or adjustment for repair.
- All variable and adjustable resistors have characteristic curve B, unless otherwise noted.
- All voltages are in Volts.
- Readings are taken with a 10Mohm digital mutimeter.
- Readings are taken with a color bar input signal.
- Voltage variations may be noted due to normal production tolerences.
- : B + bus.
- : B - bus.
- : RF signal path.
- : earth - ground.
- : earth - chassis.

Reference Information

RESISTOR	**RN**	: METAL FILM
	RC	: SOLID
	FPRD	: NON FLAMMABLE CARBON
	FUSE	: NON FLAMMABLE FUSIBLE
	RS	: NON FLAMMABLE METAL OXIDE
	RB	: NON FLAMMABLE CEMENT
	RW	: NON FLAMMABLE WIREWOUND
		: ADJUSTMENT RESISTOR
COIL	**LF-8L**	: MICRO INDUCTOR
CAPACITOR	**TA**	: TANTALUM
	PS	: STYROL
	PP	: POLYPROPYLENE
	PT	: MYLAR
	MPS	: METALIZED POLYESTER
	MPP	: METALIZED POLYPROPYLENE
	ALB	: BIPOLAR
	ALT	: HIGH TEMPERATURE
	ALR	: HIGH RIPPLE

Note : The components identified by shading and marked ⚠ are critical for safety. Replace only with the part numbers specified in the parts list.

Note : Les composants identifiés par une trame et par une marque ⚠ sont d'une importance critique pour la sécurité. Ne les remplacer que par des pièces de numéro spécifié. specified.

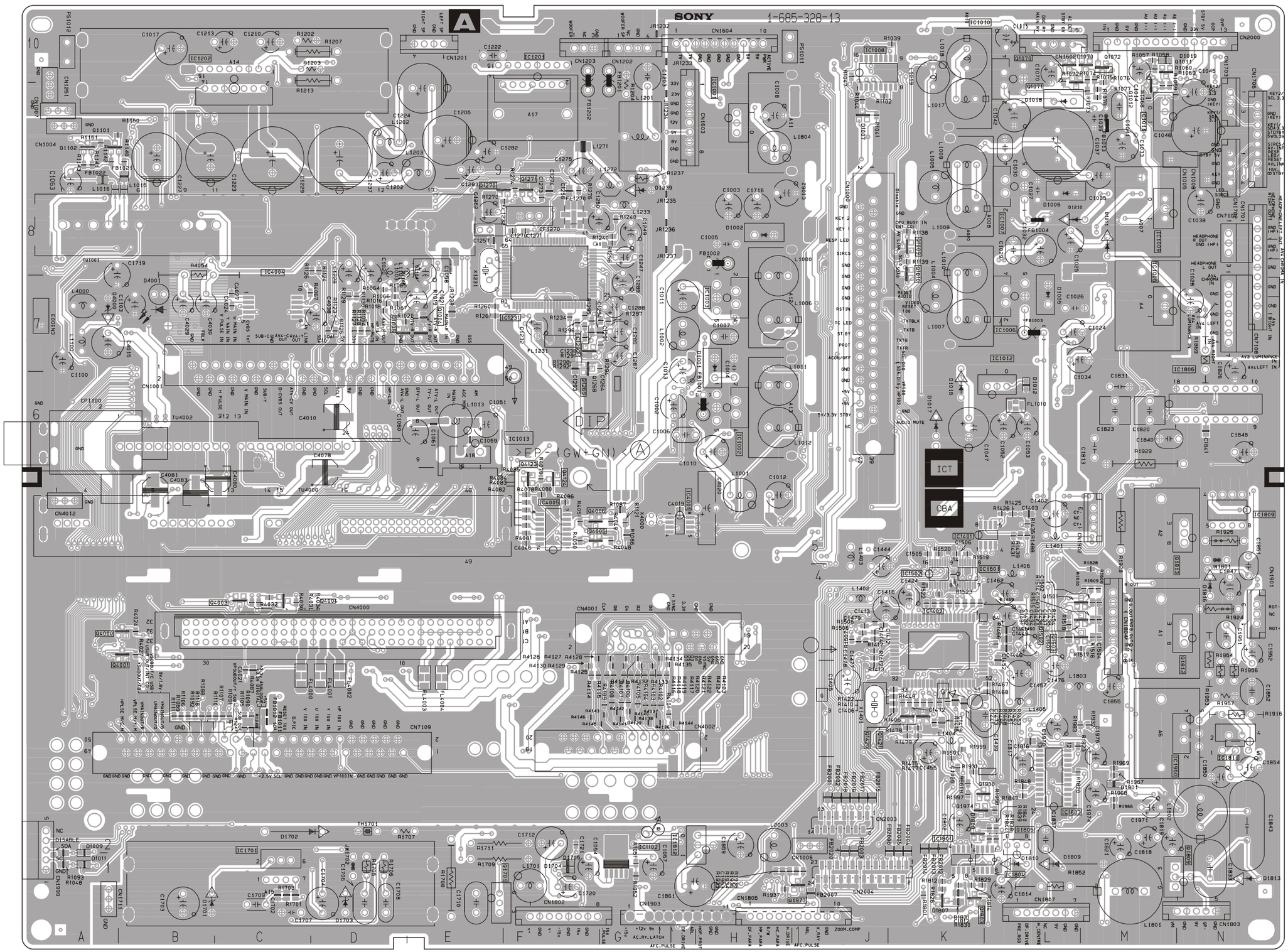

~ A Printed Wiring Board Conductor side A ~

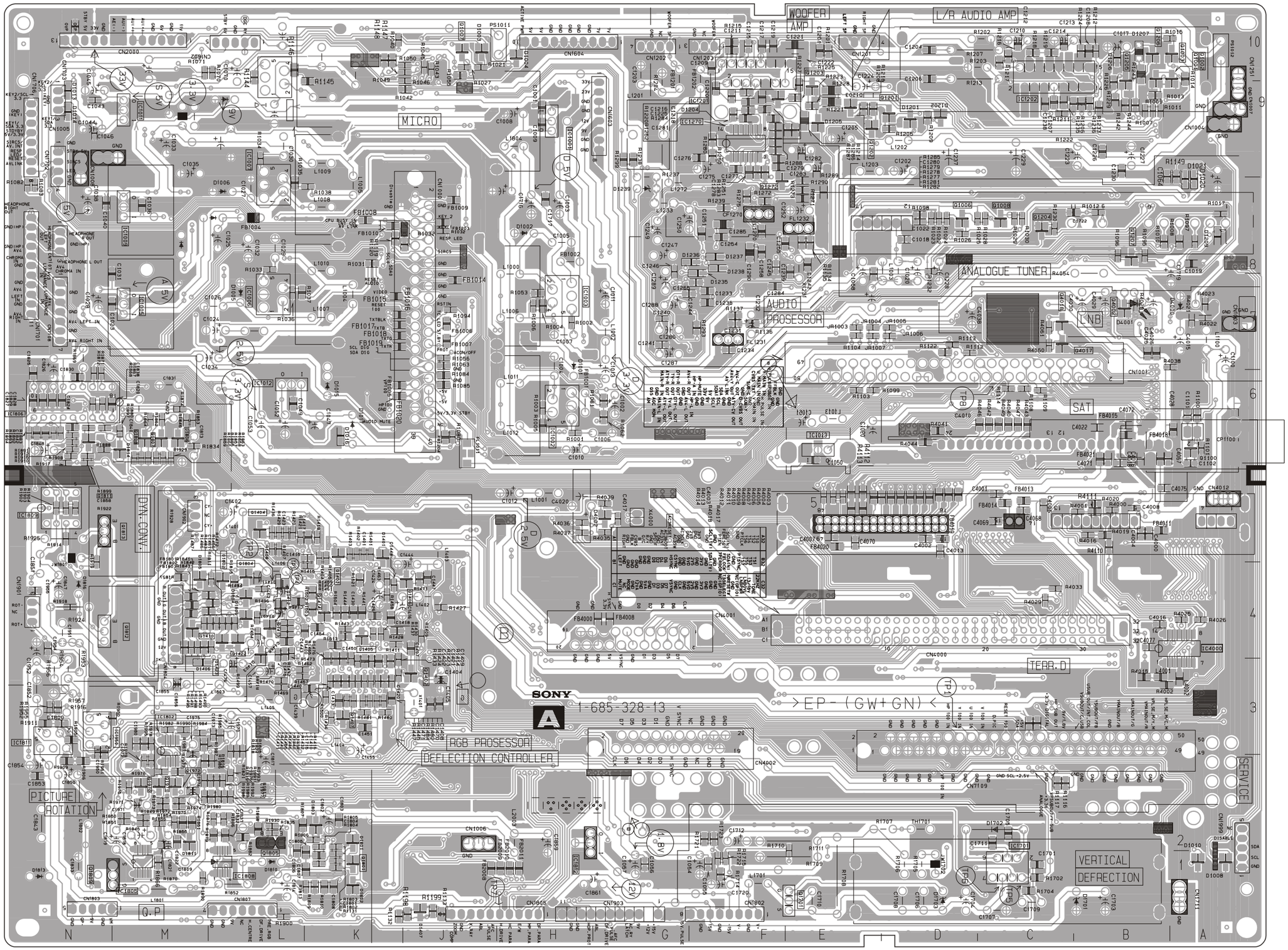

~ A Printed Wiring Board Conductor side B ~

~ A Board Difference Table ~

Ref	KV-32FQ80B	KV-32FQ80E	KV-32FQ80K	KV-32FQ80U	KV-36FQ80B	KV-36FQ80E	KV-36FQ80K	Ref	KV-32FQ80B	KV-32FQ80E	KV-32FQ80K	KV-32FQ80U	KV-36FQ80B	KV-36FQ80E	KV-36FQ80K
C1813	-	-	-	-	100PF 10.00% 50V	100PF 10.00% 50V	100PF 10.00% 50V	R1846	-	-	-	-	2.2K 5% 1/10W	2.2K 5% 1/10W	2.2K 5% 1/10W
C1820	-	-	-	-	1UF 5.00% 50V	1UF 5.00% 50V	1UF 5.00% 50V	R1853	-	-	-	-	1K 5% 1/10W	1K 5% 1/10W	1K 5% 1/10W
C1821	-	-	-	-	22UF 20.00% 50V	22UF 20.00% 50V	22UF 20.00% 50V	R1862	-	-	-	-	3.3K 5% 1/10W	3.3K 5% 1/10W	3.3K 5% 1/10W
C1823	-	-	-	-	1UF 5.00% 50V	1UF 5.00% 50V	1UF 5.00% 50V	R1863	-	-	-	-	2.2K 5% 1/10W	2.2K 5% 1/10W	2.2K 5% 1/10W
C1824	-	-	-	-	0.22UF 25V	0.22UF 25V	0.22UF 25V	R1864	-	-	-	-	3.3K 5% 1/10W	3.3K 5% 1/10W	3.3K 5% 1/10W
C1825	-	-	-	-	0.22UF 25V	0.22UF 25V	0.22UF 25V	R1865	-	-	-	-	2.2K 5% 1/10W	2.2K 5% 1/10W	2.2K 5% 1/10W
C1826	-	-	-	-	47UF 20.00% 35V	47UF 20.00% 35V	47UF 20.00% 35V	R1867	-	-	-	-	100K 5% 1/10W	100K 5% 1/10W	100K 5% 1/10W
C1828	-	-	-	-	270PF 5.00% 50V	270PF 5.00% 50V	270PF 5.00% 50V	R1868	-	-	-	-	100K 5% 1/10W	100K 5% 1/10W	100K 5% 1/10W
C1829	-	-	-	-	0.33UF 25V	0.33UF 25V	0.33UF 25V	R1869	-	-	-	-	270 5% 1/2W	270 5% 1/2W	270 5% 1/2W
C1830	-	-	-	-	0.1UF 10.00% 50V	0.1UF 10.00% 50V	0.1UF 10.00% 50V	R1870	2.2K 5% 1/10W	2.2K 5% 1/10W	2.2K 5% 1/10W	2.2K 5% 1/10W	1.2K 5% 1/10W	1.2K 5% 1/10W	1.2K 5% 1/10W
C1831	-	-	-	-	100PF 10.00% 50V	100PF 10.00% 50V	100PF 10.00% 50V	R1871	-	-	-	-	100 5% 1/10W	100 5% 1/10W	100 5% 1/10W
C1833	0.0047UF 5.00% 630	0.0047UF 5.00% 630	0.0047UF 5.00% 630	0.0047UF 5.00% 630	0.0039UF 5.00% 630V	0.0039UF 5.00% 630V	0.0039UF 5.00% 630V	R1872	-	-	-	-	100 5% 1/10W	100 5% 1/10W	100 5% 1/10W
C1838	-	-	-	-	0.033PF 10.00% 25V	0.033PF 10.00% 25V	0.033PF 10.00% 25V	R1874	-	-	-	-	1K 5% 1/10W	1K 5% 1/10W	1K 5% 1/10W
C1840	-	-	-	-	470PF 5.00% 50V	470PF 5.00% 50V	470PF 5.00% 50V	R1880	-	-	-	-	150K 5% 1/10W	150K 5% 1/10W	150K 5% 1/10W
C1841	-	-	-	-	0.033PF 10.00% 25V	0.033PF 10.00% 25V	0.033PF 10.00% 25V	R1883	-	-	-	-	1K 5% 1/10W	1K 5% 1/10W	1K 5% 1/10W
C1842	-	-	-	-	0.0047UF 10.00% 50V	0.0047UF 10.00% 50V	0.0047UF 10.00% 50V	R1888	-	-	-	-	270K 5% 1/10W	270K 5% 1/10W	270K 5% 1/10W
C1847	-	-	-	-	47UF 20.00% 35V	47UF 20.00% 35V	47UF 20.00% 35V	R1891	-	-	-	-	390 0.5% 1/10W	390 0.5% 1/10W	390 0.5% 1/10W
C1851	-	-	-	-	0.1UF 5.00% 50V	0.1UF 5.00% 50V	0.1UF 5.00% 50V	R1892	-	-	-	-	2.2K 0.5% 1/10W	2.2K 0.5% 1/10W	2.2K 0.5% 1/10W
C1858	-	-	-	-	47PF 5.00% 50V	47PF 5.00% 50V	47PF 5.00% 50V	R1893	-	-	-	-	10K 0.5% 1/10W	10K 0.5% 1/10W	10K 0.5% 1/10W
CN1902	-	-	-	-	PLUG, CONNECTOR 3P	PLUG, CONNECTOR 3P	PLUG, CONNECTOR 3P	R1894	-	-	-	-	4.7K 5% 1/10W	4.7K 5% 1/10W	4.7K 5% 1/10W
CP1100	SPLITTER RF 1-251-658-11	SPLITTER RF 1-251-658-11	SPLITTER RF 1-251-658-11	SPLITTER RF 1-251-658-11	RF SPLITTER 1-417-290-11	RF SPLITTER 1-417-290-11	RF SPLITTER 1-417-290-11	R1897	-	-	-	-	100K 5% 1/10W	100K 5% 1/10W	100K 5% 1/10W
D1814	-	-	-	-	DAN202K	DAN202K	DAN202K	R1899	-	-	-	-	1K 5% 1/10W	1K 5% 1/10W	1K 5% 1/10W
D1816	-	-	-	-	1SS119-25	1SS119-25	1SS119-25	R1904	-	-	-	-	3.3K 0.5% 1/10W	3.3K 0.5% 1/10W	3.3K 0.5% 1/10W
D1901	SHORT 0 8-216-295-91	SHORT 0 8-216-295-91	SHORT 0 8-216-295-91	SHORT 0 8-216-295-91	SHORT 0 8-216-864-11	SHORT 0 8-216-864-11	SHORT 0 8-216-864-11	R1910	-	-	-	-	10K 5% 1/10W	10K 5% 1/10W	10K 5% 1/10W
IC1806	-	-	-	-	CXA8070AP	CXA8070AP	CXA8070AP	R1912	-	-	-	-	6.8K 0.5% 1/10W	6.8K 0.5% 1/10W	6.8K 0.5% 1/10W
IC1809	-	-	-	-	LM318P	LM318P	LM318P	R1914	-	-	-	-	100 5% 1/10W	100 5% 1/10W	100 5% 1/10W
Q1806	-	-	-	-	2SA1037AK-T146--R	2SA1037AK-T146--R	2SA1037AK-T146--R	R1915	-	-	-	-	3.3K 5% 1/10W	3.3K 5% 1/10W	3.3K 5% 1/10W
Q1807	-	-	-	-	2SC2412K-T-146-R	2SC2412K-T-146-R	2SC2412K-T-146-R	R1918	-	-	-	-	2.2K 5% 1/10W	2.2K 5% 1/10W	2.2K 5% 1/10W
Q1808	-	-	-	-	2SC2412K-T-146-R	2SC2412K-T-146-	2SC2412K-T-146-	R1919	-	-	-	-	2.2K 5% 1/10W	2.2K 5% 1/10W	2.2K 5% 1/10W
Q1812	-	-	-	-	2SC5511	2SC5511	2SC5511	R1922	-	-	-	-	10K 0.5% 1/10W	10K 0.5% 1/10W	10K 0.5% 1/10W
Q1813	-	-	-	-	2SA1837	2SA1837	2SA1837	R1924	-	-	-	-	4.7 5% 1/4W	4.7 5% 1/4W	4.7 5% 1/4W
Q1972	-	-	-	-	2SC2412K-T-146-R	2SC2412K-T-146-R	2SC2412K-T-146-R	R1925	-	-	-	-	4.7 5% 1/4W	4.7 5% 1/4W	4.7 5% 1/4W
R1079	-	-	-	-	47K 5% 1/10W	47K 5% 1/10W	47K 5% 1/10W	R1928	-	-	-	-	100 5% 2W	100 5% 2W	100 5% 2W
R1492	5.6K 5% 1/10W	5.6K 5% 1/10W	5.6K 5% 1/10W	5.6K 5% 1/10W	10K 5% 1/10W	10K 5% 1/10W	10K 5% 1/10W	R1929	-	-	-	-	2.2 5% 3W	2.2 5% 3W	2.2 5% 3W
R1701	6.2K 0.5% 1/10W	6.2K 0.5% 1/10W	6.2K 0.5% 1/10W	6.2K 0.5% 1/10W	5.6K 0.5% 1/10W	5.6K 0.5% 1/10W	5.6K 0.5% 1/10W	R1966	-	-	-	-	680K 5% 1/10W	680K 5% 1/10W	680K 5% 1/10W
R1702	6.2K 0.5% 1/10W	6.2K 0.5% 1/10W	6.2K 0.5% 1/10W	6.2K 0.5% 1/10W	5.6K 0.5% 1/10W	5.6K 0.5% 1/10W	5.6K 0.5% 1/10W	R1967	150K 5% 1/10W	150K 5% 1/10W	150K 5% 1/10W	150K 5% 1/10W	82K 5% 1/10W	82K 5% 1/10W	82K 5% 1/10W
R1703	3.9K 0.5% 1/10W	3.9K 0.5% 1/10W	3.9K 0.5% 1/10W	3.9K 0.5% 1/10W	3.3K 0.5% 1/10W	3.3K 0.5% 1/10W	3.3K 0.5% 1/10W	R1968	47K 0.5% 1/10W	47K 0.5% 1/10W	47K 0.5% 1/10W	47K 0.5% 1/10W	39K 0.5% 1/10W	39K 0.5% 1/10W	39K 0.5% 1/10W
R1704	3.9K 0.5% 1/10W	3.9K 0.5% 1/10W	3.9K 0.5% 1/10W	3.9K 0.5% 1/10W	3.3K 0.5% 1/10W	3.3K 0.5% 1/10W	3.3K 0.5% 1/10W	R1970	-	-	-	-	4.7K 5% 1/10W	4.7K 5% 1/10W	4.7K 5% 1/10W
R1714	7.5K 5% 1/10W	7.5K 5% 1/10W	7.5K 5% 1/10W	7.5K 5% 1/10W	2.7K 5% 1/10W	2.7K 5% 1/10W	2.7K 5% 1/10W	R1974	-	-	-	-	2.2K 5% 1/10W	2.2K 5% 1/10W	2.2K 5% 1/10W
R1721	82K 5% 1/10W	82K 5% 1/10W	82K 5% 1/10W	82K 5% 1/10W	68K 5% 1/10W	68K 5% 1/10W	68K 5% 1/10W	R1986	47K 5% 1/10W	47K 5% 1/10W	47K 5% 1/10W	47K 5% 1/10W	68K 5% 1/10W	68K 5% 1/10W	68K 5% 1/10W
R1722	10K 5% 1/10W	10K 5% 1/10W	10K 5% 1/10W	10K 5% 1/10W	8.2K 5% 1/10W	8.2K 5% 1/10W	8.2K 5% 1/10W	R1988	47K 0.5% 1/10W	47K 0.5% 1/10W	47K 0.5% 1/10W	47K 0.5% 1/10W	68K 0.5% 1/10W	68K 0.5% 1/10W	68K 0.5% 1/10W
R1723	18K 5% 1/10W	18K 5% 1/10W	18K 5% 1/10W	18K 5% 1/10W	27K 5% 1/10W	27K 5% 1/10W	27K 5% 1/10W	TU1001	BTF-EF412	BTF-EC412	BTF-EC412	BTF-EU612	BTF-EF412	BTF-EC412	BTF-EC412
R1834	-	-	-	-	47K 5% 1/10W	47K 5% 1/10W	47K 5% 1/10W								

~ A Board Location Table (A Side) ~

DIODE																			
D1006	L - 3	D1018	L - 2	D1703	E - 10	D1816	N - 7	IC1011	M - 2	IC1801	K - 10	TRANSISTOR		Q1072	M - 1	Q1812	M - 7
D1007	J - 2	D1019	M - 1	D1704	G - 10	IC		IC1012	K - 5	IC1803	L - 9	Q1004	E - 4	Q1270	F - 3	Q1813	M - 6
D1009	B - 9	D1070	L - 1	D1705	G - 10	IC1005	M - 4	IC1102	G - 10	IC1804	K - 10	Q1005	E - 4	Q1271	G - 3	Q1973	I - 10
D1011	B - 10	D1210	L - 3	D1807	K - 10	IC1006	K - 4	IC1201	G - 2	IC1806	N - 5	Q1007	L - 1	Q1701	F - 10	Q1974	K - 9
D1012	L - 5	D1211	M - 3	D1808	K - 9	IC1007	K - 3	IC1202	C - 1	IC1809	N - 6	Q1011	M - 1	Q1803	K - 10		
D1015	K - 5	D1239	H - 3	D1809	L - 10	IC1008	J - 1	IC1231	G - 4	IC1811	N - 8	Q1012	M - 2	Q1805	L - 10		
D1017	K - 5	D1701	C - 10	D1810	L - 10	IC1009	M - 3	IC1402	K - 7	IC1812	H - 10	Q1070	L - 1	Q1809	M - 10		
		D1702	D - 9	D1813	N - 10	IC1010	K - 2	IC1701	D - 10	IC1950	M - 9	Q1071	L - 2	Q1811	M - 6		

~ A Board Location Table (B Side) ~

DIODE																			
D1003	F - 1	D1014	B - 2	D1206	M - 1	D1801	E - 9	D1814	B - 5	Q1002	M - 2	Q1203	J - 2	Q1407	E - 8	Q1804	D - 7		
D1004	G - 1	D1016	E - 5	D1207	M - 1	D1802	E - 10	IC		Q1003	M - 1	Q1204	L - 3	Q1410	C - 7	Q1806	C - 5		
D1005	D - 4	D1201	K - 2	D1209	N - 3	D1803	D - 9	IC1270	I - 2	Q1006	K - 3	Q1205	M - 1	Q1413	D - 7	Q1807	C - 5		
D1008	N - 10	D1202	K - 2	D1235	H - 4	D1804	D - 7	IC1802	C - 8	Q1008	L - 3	Q1207	M - 4	Q1422	D - 7	Q1808	C - 5		
D1010	N - 10	D1203	J - 2	D1236	H - 4	D1805	C - 7	IC1808	C - 10	Q1100	N - 5	Q1272	I - 3	Q1423	C - 7	Q1970	C - 9		
D1013	B - 2	D1204	I - 2	D1403	D - 7	D1806	D - 7	TRANSISTOR		Q1201	J - 2	Q1402	E - 8	Q1801	E - 10	Q1971	C - 9		
		D1205	J - 2	D1406	C - 8	D1811	C - 9	Q1001	M - 2	Q1202	J - 2	Q1406	E - 7	Q1802	C - 7	Q1972	C - 9		

~ A Board Semiconductor Voltages ~

Ref	(s)	(g)	(d)	Ref	(e)	(b)	(c)	Ref	(e)	(b)	(c)	Ref	(e)	(b)	(c)
Q1701	-0.3	11.6	-0.3	Q1008	8.8	8.2	4.5	Q1207	0	0.4	4.2	Q1422	3.5	4.2	0
Q1809	0	4.8	25.7	Q1011	0	0.7	0	Q1270	1.2	1.8	4.9	Q1423	3.5	2.2	8.9
Ref	**(e)**	**(b)**	**(c)**	Q1072	0	0	3.2	Q1271	1.8	2.4	4.9	Q1801	0	0.5	2.0
Q1001	0	0	4.9	Q1100	0	4.6	0	Q1272	4.9	5.5	8.8	Q1803	0	0.4	2.0
Q1002	0	0	4.9	Q1201	12.2	12.6	0	Q1402	5.0	5.7	8.9	Q1804	0	0.1	4.6
Q1003	4.9	4.9	0	Q1202	0	0	4.2	Q1406	3.1	2.4	0	Q1805	12.0	11.6	5.7
Q1004	1.3	2.0	4.3	Q1203	0	0	4.2	Q1407	3.5	2.8	0	Q1806	1.9	1.3	0
Q1005	4.9	4.3	2.1	Q1204	0	0	4.2	Q1410	3.5	8.0	0	Q1807	2.8	3.4	7.8
Q1006	2.6	3.2	8.2	Q1205	0	0.6	0	Q1413	3.6	3.0	0	Q1808	2.7	3.3	7.8

~ A Board Waveforms ~

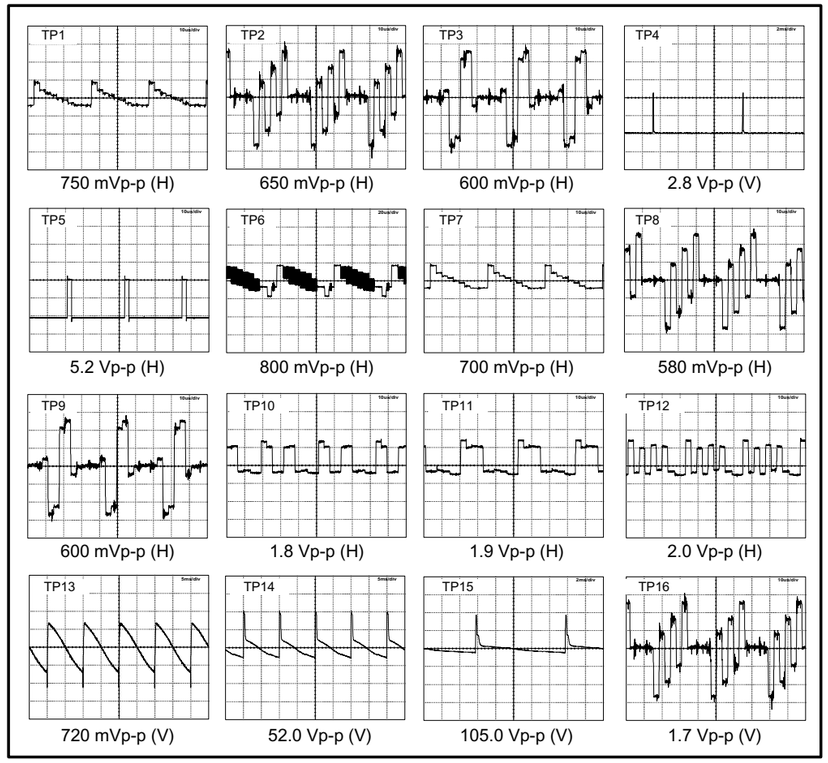

~ A Board IC Voltages ~

Ref No	Pin No	Volts (V)	Ref No	Pin No	Volts (V)	Ref No	Pin No	Volts (V)	Ref No	Pin No	Volts (V)	Ref No	Pin No	Volts (V)	Ref No	Pin No	Volts (V)	Ref No	Pin No	Volts (V)	Ref No	Pin No	Volts (V)	Ref No	Pin No	Volts (V)	Ref No	Pin No	Volts (V)	Ref No	Pin No	Volts (V)	Ref No	Pin No	Volts (V)
IC1007	1	7.1	IC1201	4	0	IC1202	7	0	IC1270	10	4.8	IC1402	14	2.4	IC1402	32	3.1	IC1402	52	3.4	IC1701	6	15.3	IC1803	1	1.9	IC1803	19	0	IC1806	5	4.9	IC1808	5	5.1
	2	0		5	0		8	0		11	0		15	4.9		34	0		53	3.4		7	1.2		2	1.1		20	4.8		6	4.9		6	4.3
	3	5.8		6	-13.3		9	0		12	0.9		16	2.6		35	0.9		54	0.6	IC1801	1	4.4		3	3.6		21	4.8		7	4.9		7	4.8
	4	6.3		7	0		10	0		13	0.8		17	2.6		37	0		55	8.9		2	5.8		4	2.3		22	4.9		8	4.9		8	8.9
	5	0		8	-15.3		11	0.3		14	7.6		18	1.1		38	2.3		56	4.3		3	6.2		5	4.2		23	0		9	5.2	IC1809	1	9.2
IC1010	1	12.6		9	0		12	0	IC1402	1	0		19	4.9		39	2.1	IC1402	57	4.9		4	0		6	4.2		24	0		10	12.0		2	3.6
	2	5.0		10	4.2		13	0		2	0		20	3.5		40	2.8		58	3.7	IC1801	5	4.4		7	2.4	IC1804	1	6.3		11	4.1		3	3.6
	3	0		11	15.2		14	0		3	0		21	3.4		41	0		59	1.5		6	4.3		8	2.6		2	4.3		12	4.9		4	-14.2
	4	1.3		12	-4.3		15	15.2		4	3.1		22	3.4		42	0		60	1.5		7	0.4		9	2.6		3	4.3		13	4.9		5	9.2
	5	6.8		13	15.2	IC1270	1	4.9		5	3.1		23	5.0		43	3.3		61	8.9		8	12.0		10	1.5		4	0		14	1.9		6	-1.2
	1	13.2		14	-15.3		2	4.8		6	3.1		24	0		44	0		62	2.9	IC1802	1	5.4		11	2.2		5	3.4		15	1.1		7	12.0
	2	-12.5		15	-15.3		3	4.8	IC1402	7	0		25	4.8		45	4.2		63	2.9		2	1.1		12	2.4		6	3.5		16	4.8		8	-12.9
IC1102	3	-15.4		1	0		4	8.8		8	3.6		26	4.8		46	3.5		64	2.7		3	1.1		13	4.9		7	0		17	4.8		1	2.0
	4	-0.4		2	15.2	IC1270	5	4.8		9	3.6		27	0.9		47	3.8		1	1.2		4	0		14	0		8	8.9		18	0		2	2.0
	5	13.7	IC1202	3	0		6	4.8		10	3.6		28	0.3		48	4.4		2	14.8		5	1.5		15	4.9	IC1806	1	4.8	IC1808	1	4.8	IC1811	3	-14.2
	1	0		4	-15.3		7	4.9		11	0		29	5.0		49	5.2	IC1701	3	-11.4		6	1.5		16	4.9		2	4.8		2	2.0		4	1.0
IC1201	2	-4.3		5	0		8	4.9		12	0.9		30	5.7		50	3.4		4	-14.2		7	2.6		17	4.9		3	4.8		3	1.6		5	8.9
	3	10.0		6	0.3		9	4.8		13	0		31	1.3		51	4.1		5	0		8	8.9		18	0		4	4.8		4	0			

A..-32/36FQ80

COMPONENTS MARKED AS XX ARE NOT FITTED ON THIS MODEL

A 2/4 INTERFACE

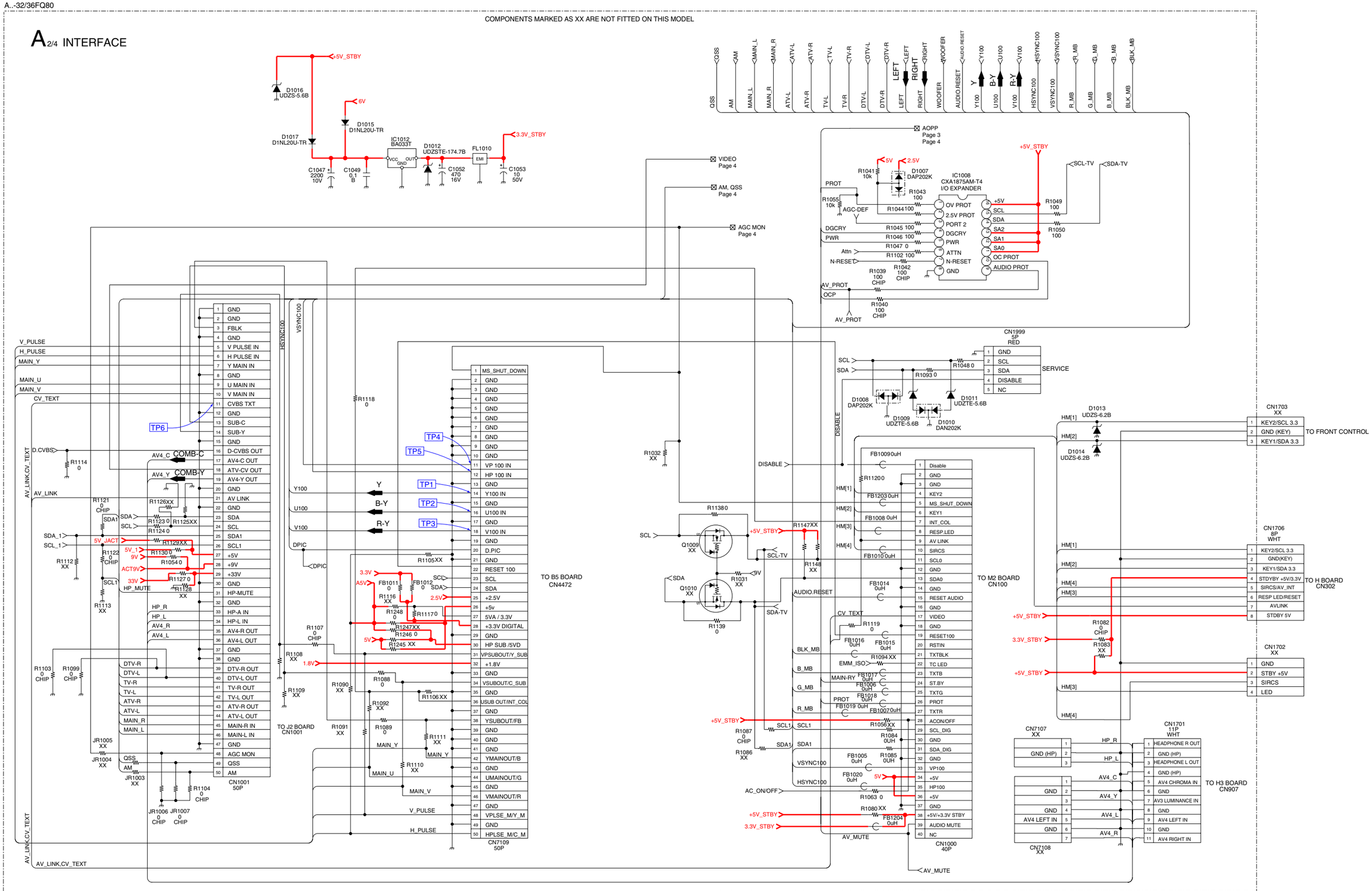

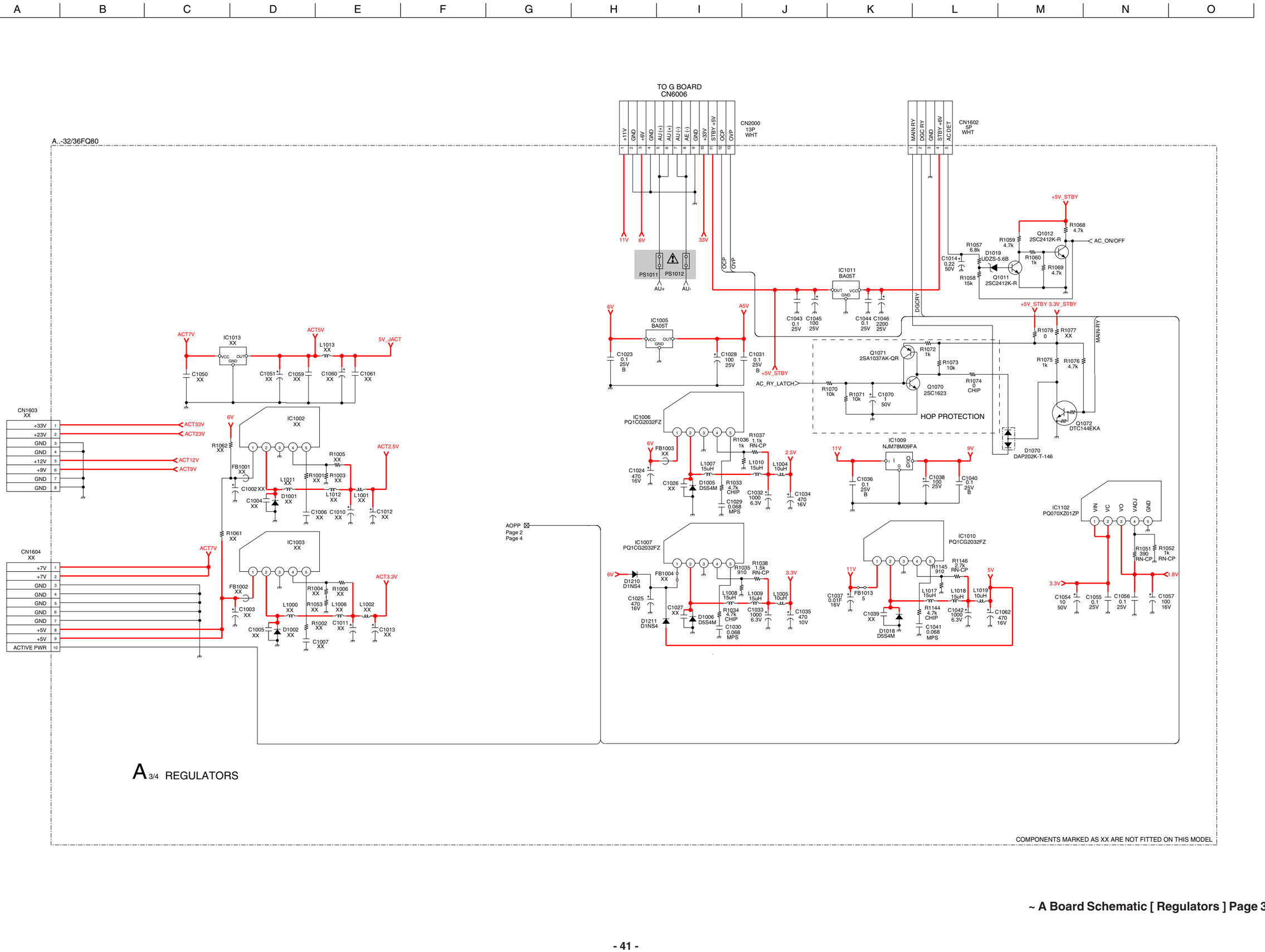

~ A Board Schematic [Regulators] Page 3/4~

A..-32/36FQ80

IC1201
TDA7482
AUDIO AMPLIFIER WOOFER

POWER-OFF-MUTE

AUDIO PROTECTION

AOPP
Page 2
Page 3

WOOFER

AUDIO EARTH

CN1251

CN1203
XX
1 WOOFER
2 NC
3 GND

IC1202
LM1786TF

AUDIO AMPLIFIER
LEFT AND RIGHT

AUDIO L

AUDIO R

CN1201
4P
WHT
1 LEFT SP
2 GND
3 RIGHT SP
4 GND

CN1202
4P
RED
1 WOOFER SP
2 NC
3 GND
4 NC

TO SUB WOOFER

TU1001

TUNER

CP1100

ANALOGUE TUNER

VIDEO
Page 2

AGC MON
Page 2

AM, QSS
Page 2

A 4/4 AUDIO AND ANALOGUE TUNER

COMPONENTS MARKED AS XX ARE NOT FITTED ON THIS MODEL

~ A Board Schematic [Audio & Analogue Tuner] Page 4/4~

A 1/4 AUDIO DECODER AND AMPLIFIER
VERTICAL DEFLECTION- PICTURE ROTATION-
DYNAMIC CONVERGENCE

IC1231 MSP3410G-QA-B10

IC1402 CXA2150AQ-TL

IC1701 STV9379

IC1801 LM3910T

IC1802 LM3886R

IC1803 M38821A1HP-ER

IC1804 LM3910T

IC1805 XX

IC1806

IC1808 LM3910T

IC1809

IC1811 LA6500-FA

IC1812 BA157

IC1950 LA6500-FA

ROTATION IN(S)

IC1270 NJM4403AM OUTPUT AMP

IC1401 XX

IC1501 XX

IC1502 XX

CN2003 XX
GND 1
PUE_R 2
PUE_G 3
PUE_B 4
GND 5
PUE_BLK 6
GND 7
DISABLE 8
SCL 9
SDA 10
AUDIO MUTE 11
AUDIO PROT 12
AC ON/OFF 13
GND 14

CN2004 XX
VPROT 1
+12V 2
VS 3
+12V 4
HS 5
+12V 6
H PULSE 7
+12V 8
HD 9
GND 10
E/W 11
GND 12
V1M 13
GND 14
H SHIFT 15
GND 16
VM 17
GND 18
ABL 19
GND 20
VD1-1 21
GND 22
VD1+1 23
HVPROT 24

CN1802 8P WHT
15V_PULSE 8
GND 7
+15V 6
GND 5
-15V 4
V- 3
GND 2
V+ 1
TO D1 BOARD CN8512

CN1803 5P WHT
VM 1
GND 2
+5V 3
QP- 4
GND 5
9V

CN1804 8P WHT
R_OUT 1
GND 2
G_OUT 3
GND 4
B_OUT 5
GND 6
+12V 7
1K 8
TO C1 BOARD CN9001

CN1805 10P YEL
DF_PARA 1
MP_PARA 2
E/W 3
HC_PARA 4
H_DRIVE 5
AFC_PULSE 6
ABL 7
X_RAY 8
GND 9
ZOOM_COMP 10

CN1901 3P WHT
ROT- 1
NC 2
ROT+ 3
TO ROT COIL

CN1902
CY+ 1
NC 2
CY- 3
TO CY

CN1900 0
PRE_RGB 1
DF_DRIVE 2
H_CENTRE 3
NC 4
+5V 5
GND 6
GND 7
TO D1 BOARD CN8616

CN1903 11P
+15V 1
+12V 3
H_PROT 4
HOP_OVP 5
AFC_PULSE 6
DF_DRIVE 7
ABL 8
GND 9
GND 10
GND 11
TO D2 BOARD CN6801

CN1711 XX
GND 1

CN1901 3P WHT
ROT- 1
NC 2
ROT+ 3
TO ROT COIL

CN1902
CY+ 1
NC 2
CY- 3
TO CY

CN1900 0
PRE_RGB 1
DF_DRIVE 2
H_CENTRE 3
NC 4
+5V 5
GND 6
GND 7
TO D1 BOARD CN8616

CN1903 11P
+15V 1
+12V 3
H_PROT 4
HOP_OVP 5
AFC_PULSE 6
DF_DRIVE 7
ABL 8
GND 9
GND 10
GND 11
TO D2 BOARD CN6801

COMPONENTS MARKED AS XX ARE NOT FITTED ON THIS MODEL.

~ A Schematic [Audio Decoder and Amplifier, Vertical Deflection, Picture Rotation, Dynamic Convergence] page 1/4 ~

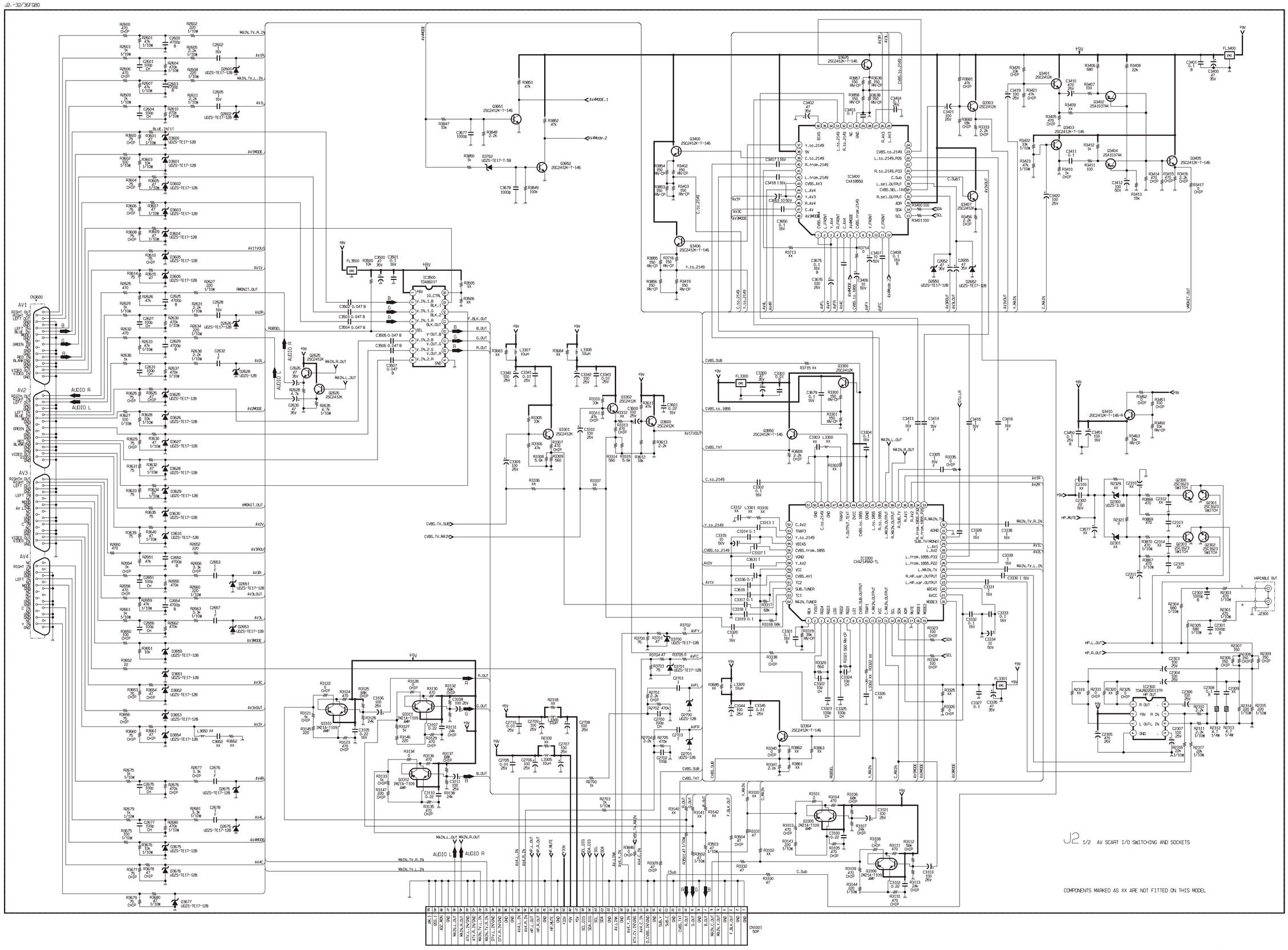
AV1
AV2
AV3
AV4
AUDIO R
AUDIO L
MAIN_TV_R_IN
MAIN_TV_L_IN
BLUE_IN
AV1MODE
AV1TVOUT
AV1V
RMONIT_OUT
AV2R
RGBSEL
AV2MODE
AV2V
AV3MODE
AV3R
AV3OUT
AV3L
AV3C
AV3VOUT
AV3Y
AV4R
AV4L
AV4MODE
AV4C
VMONIT_OUT
IC3500
TDA8601T
IC3400
CXA1895Q
IC3300
CXA1949AQ-TL
IC2300
TDA2822D0013TR
Q3400
2SC2412K-T-146
Q3300
2SC2412K
Q3302
2SC2412K
Q3303
2SC2412K
Q3305
IMZ1A-T109
Q3306
IMZ1A-T109
Q2300
2SC1623
SWITCH
Q2301
2SC1623
SWITCH
Q2302
2SC1623
SWITCH
Q3304
2SC2412K-T-146
Q3305
2SC2412K-T-146
Q3306
2SC2412K-T-146
Q3307
2SC2412K-T-146
Q3308
2SC2412K-T-146
Q3309
2SC2412K-T-146
Q3310
2SC2412K-T-146
Q3311
IMZ1A-T109
Q3312
IMZ1A-T109
Q3313
IMZ1A-T109
Q3314
IMZ1A-T109
Q3315
IMZ1A-T109
Q3316
IMZ1A-T109
Q3317
IMZ1A-T109
Q3318
IMZ1A-T109
Q3319
IMZ1A-T109
Q3320
IMZ1A-T109
Q3321
IMZ1A-T109
Q3322
IMZ1A-T109
Q3323
IMZ1A-T109
Q3324
IMZ1A-T109
Q3325
2SC2412K-T-146
Q3326
2SC2412K-T-146
Q3327
2SC2412K-T-146
Q3328
2SC2412K-T-146
Q3329
2SC2412K-T-146
Q3330
2SC2412K-T-146
Q3331
2SC2412K-T-146
Q3332
2SC2412K-T-146
Q3333
2SC2412K-T-146
Q3334
2SC2412K-T-146
Q3335
2SC2412K-T-146
Q3336
2SC2412K-T-146
Q3337
2SC2412K-T-146
Q3338
2SC2412K-T-146
Q3339
2SC2412K-T-146
Q3340
2SC2412K-T-146
Q3341
2SC2412K-T-146
Q3342
2SC2412K-T-146
Q3343
2SC2412K-T-146
Q3344
2SC2412K-T-146
Q3345
2SC2412K-T-146
Q3346
2SC2412K-T-146
Q3347
2SC2412K-T-146
Q3348
2SC2412K-T-146
Q3349
2SC2412K-T-146
Q3350
2SC2412K-T-146
Q3351
2SC2412K-T-146
Q3352
2SC2412K-T-146
Q3353
2SC2412K-T-146
Q3354
2SC2412K-T-146
Q3355
2SC2412K-T-146
Q3356
2SC2412K-T-146
Q3357
2SC2412K-T-146
Q3358
2SC2412K-T-146
Q3359
2SC2412K-T-146
Q3360
2SC2412K-T-146
Q3361
2SC2412K-T-146
Q3362
2SC2412K-T-146
Q3363
2SC2412K-T-146
Q3364
2SC2412K-T-146
Q3365
2SC2412K-T-146
Q3366
2SC2412K-T-146
Q3367
2SC2412K-T-146
Q3368
2SC2412K-T-146
Q3369
2SC2412K-T-146
Q3370
2SC2412K-T-146
Q3371
2SC2412K-T-146
Q3372
2SC2412K-T-146
Q3373
2SC2412K-T-146
Q3374
2SC2412K-T-146
Q3375
2SC2412K-T-146
Q3376
2SC2412K-T-146
Q3377
2SC2412K-T-146
Q3378
2SC2412K-T-146
Q3379
2SC2412K-T-146
Q3380
2SC2412K-T-146
Q3381
2SC2412K-T-146
Q3382
2SC2412K-T-146
Q3383
2SC2412K-T-146
Q3384
2SC2412K-T-146
Q3385
2SC2412K-T-146
Q3386
2SC2412K-T-146
Q3387
2SC2412K-T-146
Q3388
2SC2412K-T-146
Q3389
2SC2412K-T-146
Q3390
2SC2412K-T-146
Q3391
2SC2412K-T-146
Q3392
2SC2412K-T-146
Q3393
2SC2412K-T-146
Q3394
2SC2412K-T-146
Q3395
2SC2412K-T-146
Q3396
2SC2412K-T-146
Q3397
2SC2412K-T-146
Q3398
2SC2412K-T-146
Q3399
2SC2412K-T-146
Q3400
2SC2412K-T-146
Q3401
2SC2412K-T-146
Q3402
2SA1037AK
Q3403
2SC2412K-T-146
Q3404
2SA1037AK
Q3405
2SC2412K-T-146
Q3406
2SC2412K-T-146
Q3407
2SC2412K-T-146
Q3408
2SC2412K-T-146
Q3409
2SC2412K-T-146
Q3410
2SC2412K-T-146
Q3411
2SC2412K-T-146
Q3412
2SC2412K-T-146
Q3413
2SC2412K-T-146
Q3414
2SC2412K-T-146
Q3415
2SC2412K-T-146
Q3416
2SC2412K-T-146
Q3417
2SC2412K-T-146
Q3418
2SC2412K-T-146
Q3419
2SC2412K-T-146
Q3420
2SC2412K-T-146
Q3421
2SC2412K-T-146
Q3422
2SC2412K-T-146
Q3423
2SC2412K-T-146
Q3424
2SC2412K-T-146

~ J2 Board Schematic Diagram [AV, Scart, I/O Switching and Sockets] Page 2/2 ~

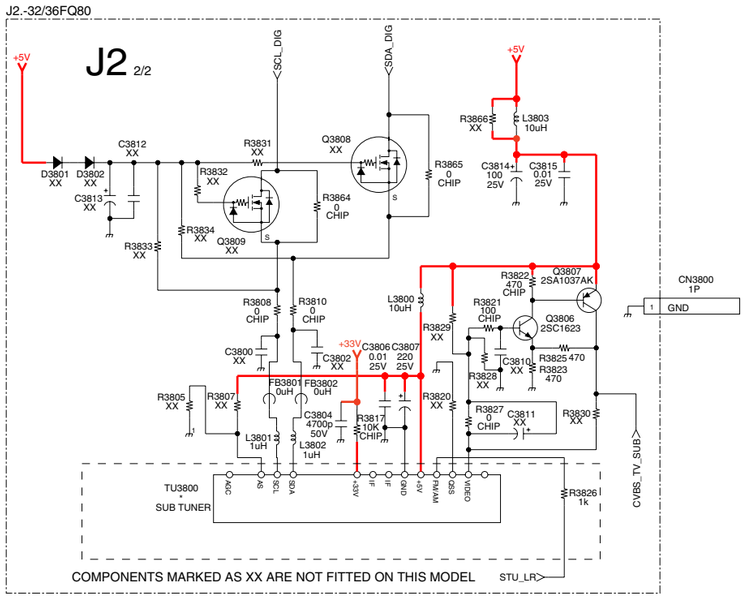

~ J2 Board Difference Table ~

Ref	KV-32FQ80B	KV-32FQ80E	KV-32FQ80K	KV-32FQ80U	KV-36FQ80B	KV-36FQ80E	KV-36FQ80K
CN3600	CONNECTOR, 21P 1-816-666-11	CONNECTOR, 21P 1-815-673-11	CONNECTOR, 21P 1-815-673-11	CONNECTOR, 21P 1-815-673-11	CONNECTOR, 21P 1-816-666-11	CONNECTOR, 21P 1-815-673-11	CONNECTOR, 21P 1-815-673-11
TU3800	BTF-EF412	BTF-EC412	BTF-EC412	BTF-EU612	BTF-EF412	BTF-EC412	BTF-EC412

~ F3 Board Schematic Diagram [Power Switch, SIRCS Receiver and Stand-By LED Indicator] ~

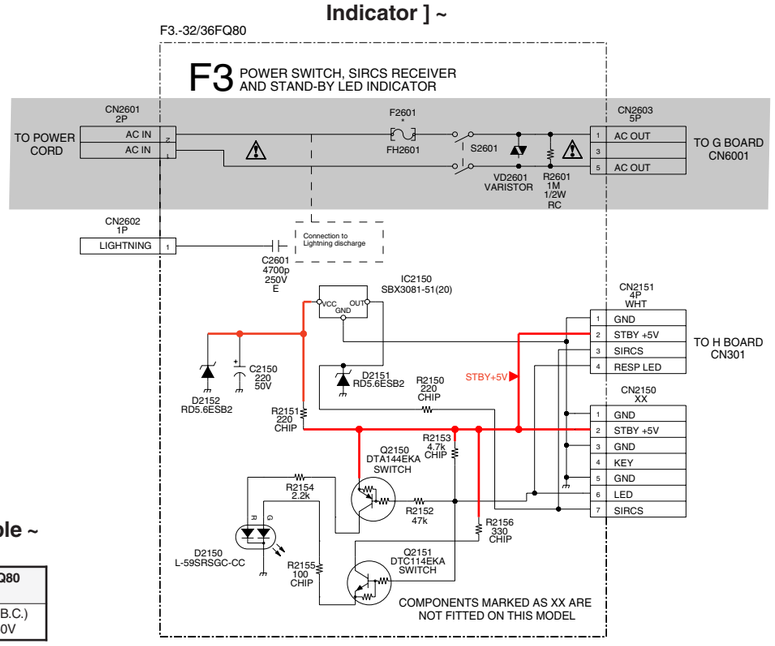

~ F3 Board Difference Table ~

Ref	KV-32FQ80	KV-36FQ80
F2601	FUSE (H.B.C.) 5A/250V	FUSE (H.B.C.) 6.3A/250V

~ H3 Board Schematic Diagram [Front AV Input, Headphone and Control Switches] ~

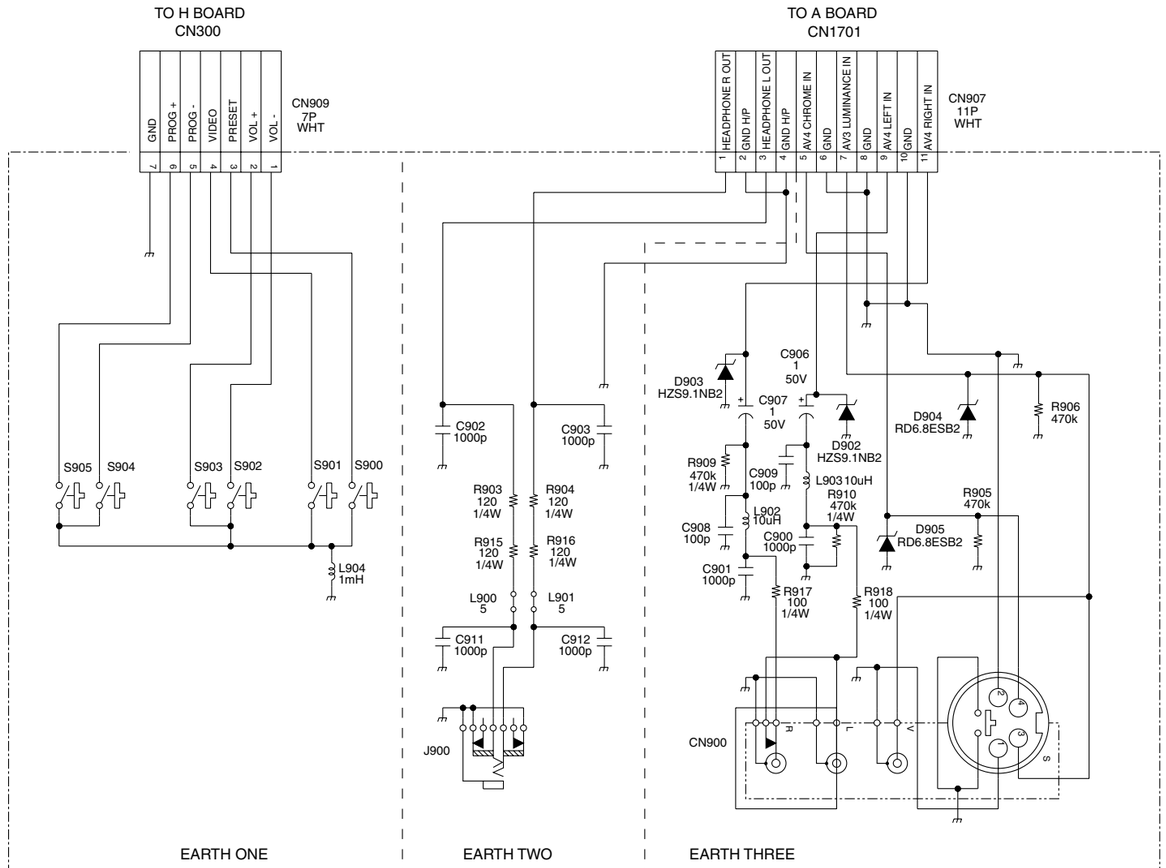

TO IMPROVE EARTH PERFORMANCE

TO CONNECT EARTH ONE TO EARTH THREE FIT JW 7604 AND JW 7605

TO CONNECT EARTH TWO TO EARTH THREE FIT JW 7610 AND JW 7611

H3 FRONT AV INPUT, HEADPHONE & CONTROL SWITCHES

COMPONENTS MARKED AS XX ARE NOT FITTED ON THIS MODEL

H3.-32/36FQ80

~ J2 Printed Wiring Board Conductor side A ~

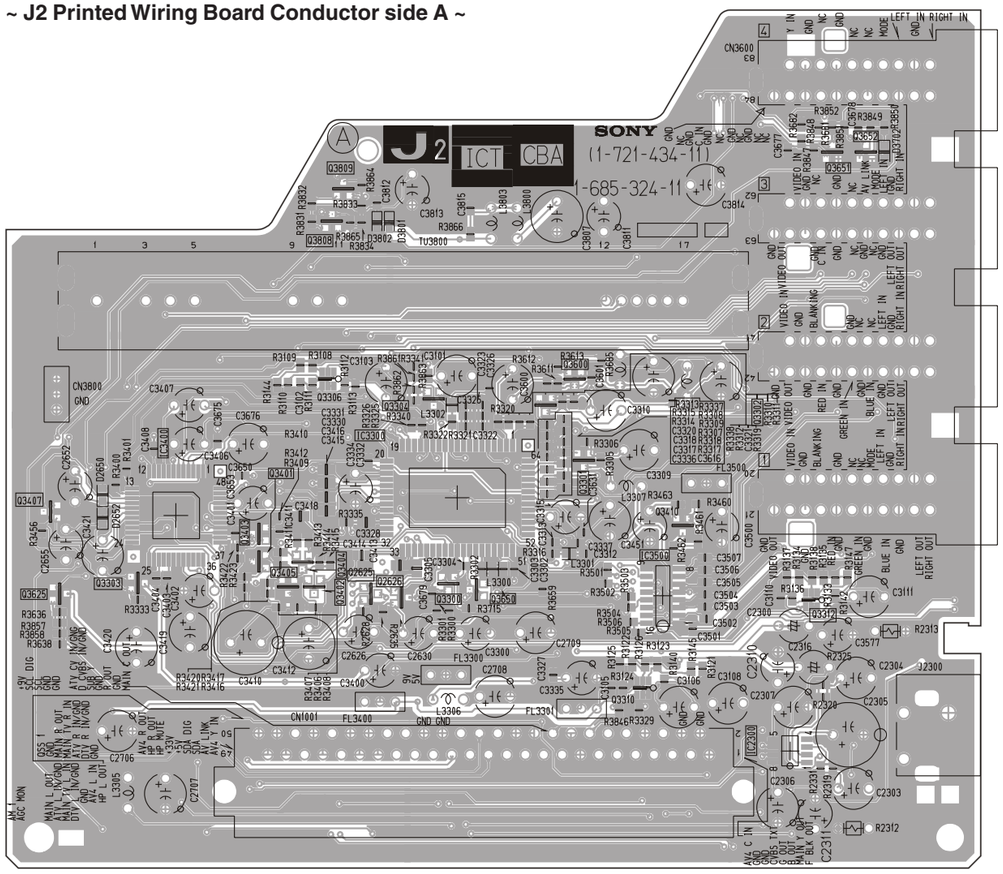

~ J2 Printed Wiring Board Conductor side B ~

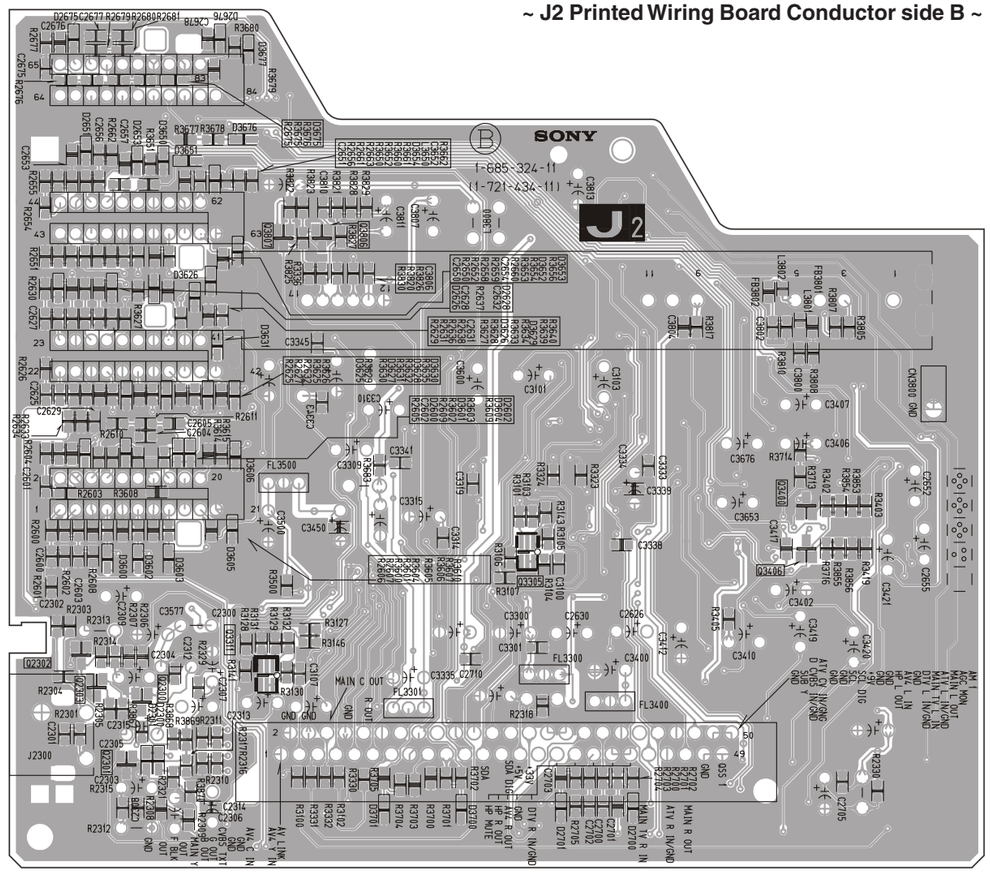

~ J2 Board Location Table A side ~

DIODE		IC		IC3500	E - 5	Q3300	D - 5	Q3304	D - 3	Q3401	C - 4	Q3405	C - 4	Q3625	A - 5
D2650	B - 4	IC2300	F - 6	TRANSISTORS		Q3301	E - 4	Q3306	C - 3	Q3402	C - 5	Q3407	A - 4	Q3650	D - 5
D2652	B - 4	IC3300	D - 4	Q2625	C - 5	Q3302	D - 3	Q3310	E - 5	Q3403	C - 4	Q3410	E - 4	Q3651	F - 2
D3702	G - 2	IC3400	B - 4	Q2626	D - 5	Q3303	B - 5	Q3312	F - 5	Q3404	C - 4	Q3600	E - 3	Q3652	G - 2

~ J2 Board Location Table B side ~

DIODE		D2651	I - 2	D3600	I - 4	D3606	J - 4	D3630	J - 3	D3654	I - 2	TRANSISTOR		Q3311	I - 5
D2300	I - 5	D2653	I - 2	D3601	I - 4	D3625	I - 3	D3631	I - 3	D3675	I - 1	Q2300	I - 5	Q3400	M - 4
D2600	I - 4	D2675	I - 1	D3602	I - 4	D3626	I - 3	D3650	I - 2	D3676	J - 2	Q2301	I - 6	Q3406	M - 4
D2602	I - 4	D2676	I - 1	D3603	I - 4	D3627	I - 3	D3651	I - 2	D3677	J - 1	Q2302	I - 5	Q3806	J - 2
D2626	H - 3	D2700	L - 6	D3604	I - 4	D3628	I - 3	D3652	I - 3	D3700	K - 6	Q2303	I - 5	Q3807	J - 2
D2628	I - 3	D2701	L - 6	D3605	J - 4	D3629	I - 3	D3653	J - 2	D3701	J - 6	Q3305	L - 5		

~ F3 Printed Wiring Board Conductor side ~

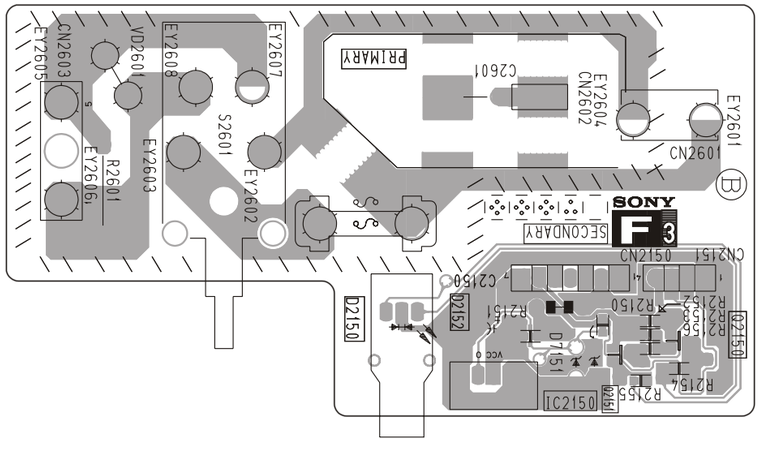

~ H3 Printed Wiring Board Conductor side ~

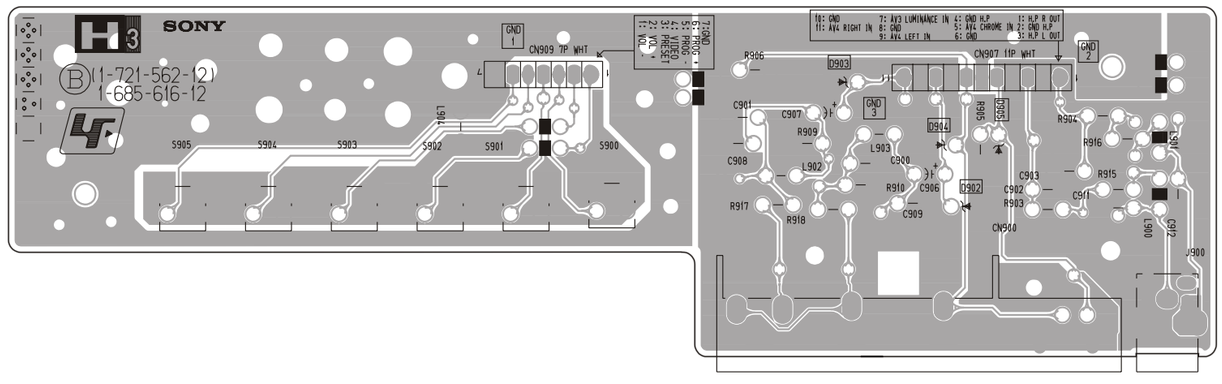

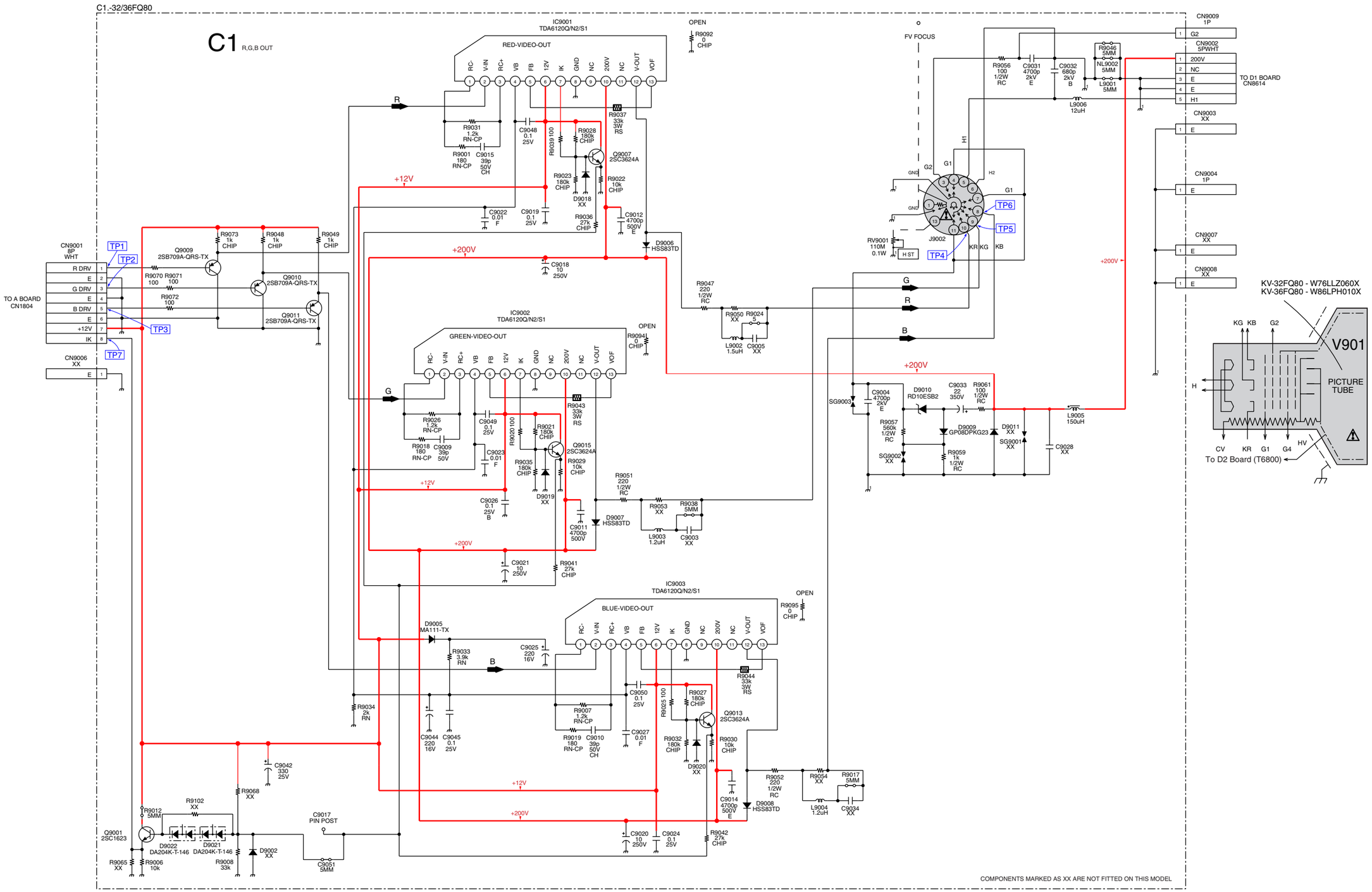

~ C1 Board Schematic Diagram [R-G-B Out] ~

~ C1 Printed Wiring Board Conductor side ~

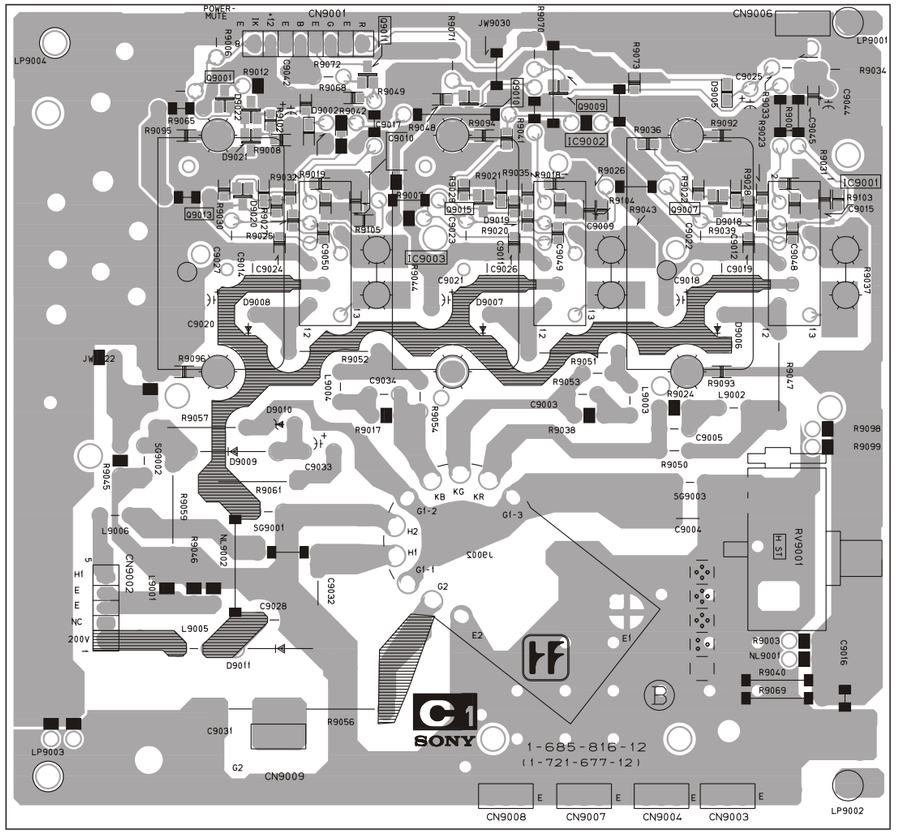

~ C1 Board Waveforms ~

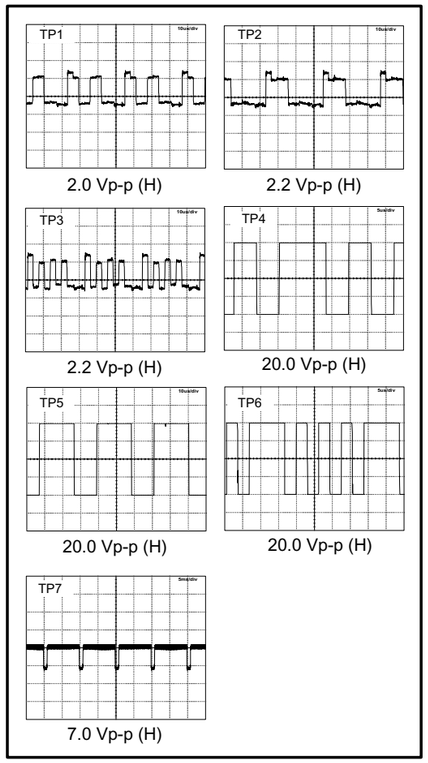

~ MS2 Printed Wiring Board Conductor side A ~

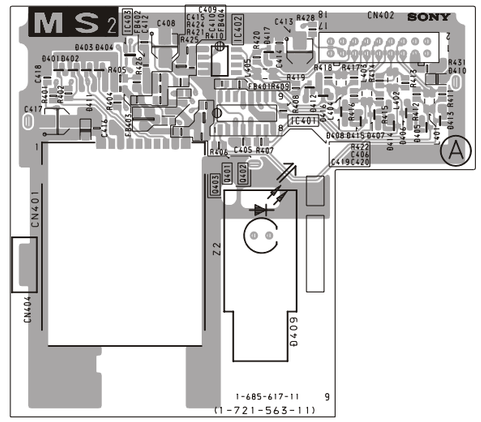

~ MS2 Printed Wiring Board Conductor side B ~

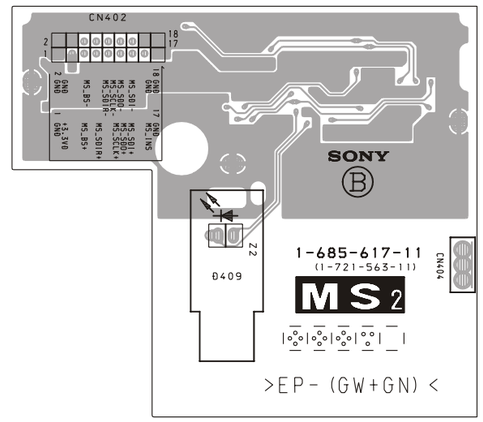

~ C1 Board Semiconductor Voltage Table ~

Ref	(e)	(b)	(c)
Q9001	5.5	7.1	12.0
Q9007	10.3	11.3	12.0
Q9009	3.6	2.8	0
Q9010	3.6	2.9	0
Q9011	3.7	2.9	0
Q9013	10.4	11.4	12.0
Q9015	9.4	10.5	12.0

~ C1 Board IC Voltage Table ~

Ref No	Pin No	Volts (V)	Ref No	Pin No	Volts (V)	Ref No	Pin No	Volts (V)
IC9001	1	2.7	IC9002	1	2.7	IC9003	1	2.7
	2	3.6		2	3.6		2	3.8
	3	2.9		3	3.0		3	2.9
	4	3.7		4	3.7		4	3.7
	5	2.0		5	2.1		5	2.0
	6	12.0		6	11.9		6	12.0
	7	11.4		7	10.7		7	11.5
	8	0		8	0		8	0
	10	211.6		10	211.5		10	211.6
	12	153.1		12	151.0		12	143.0
	13	145.0		13	142.6		13	136.4

~ H Printed Wiring Board Conductor side ~

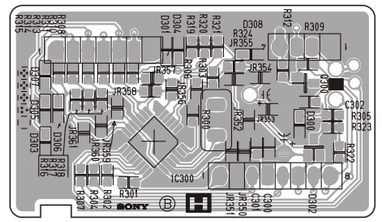

~ MS2 Board Schematic Diagram [Memory Stick] ~

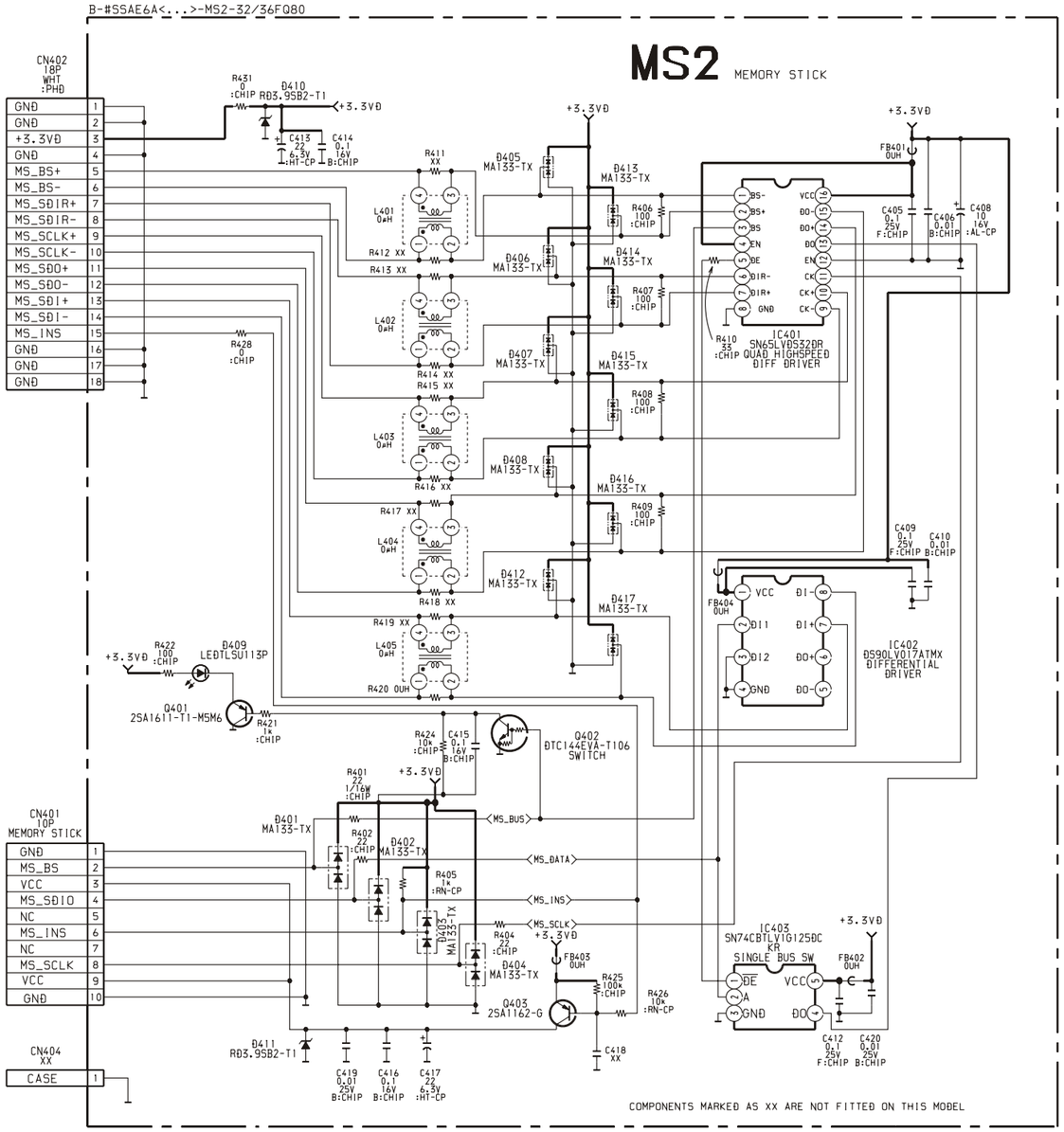

~ H Board Schematic Diagram [AV Link Processor] ~

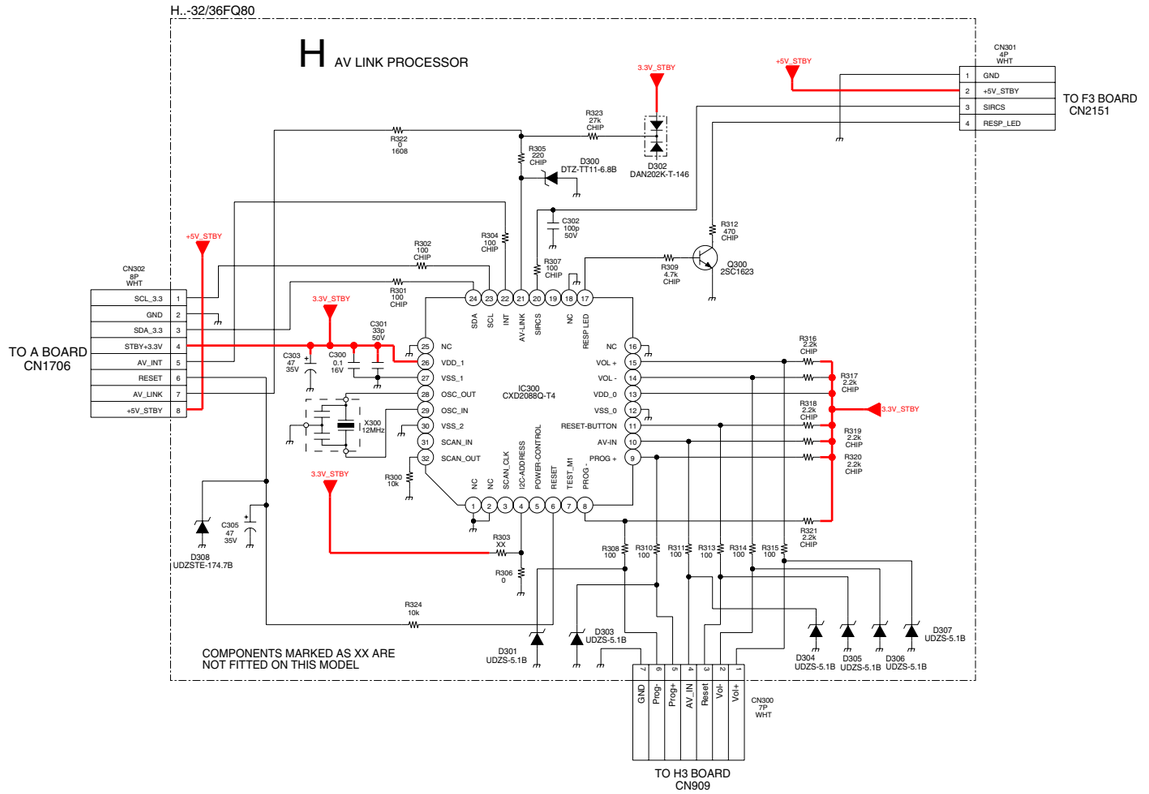

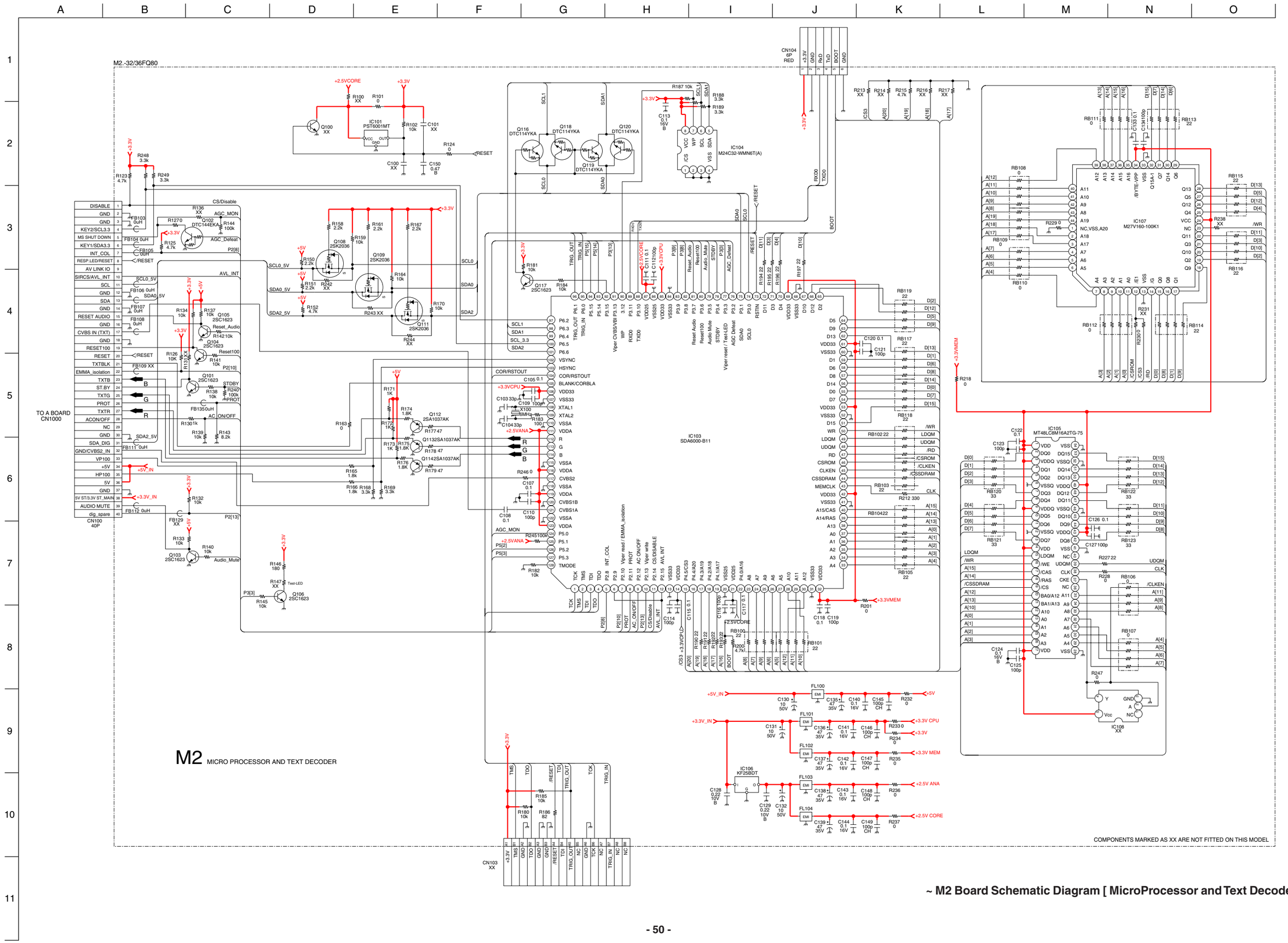

~ M2 Board Schematic Diagram [MicroProcessor and Text Decoder] ~

~ M2 Printed Wiring Board Conductor side A ~

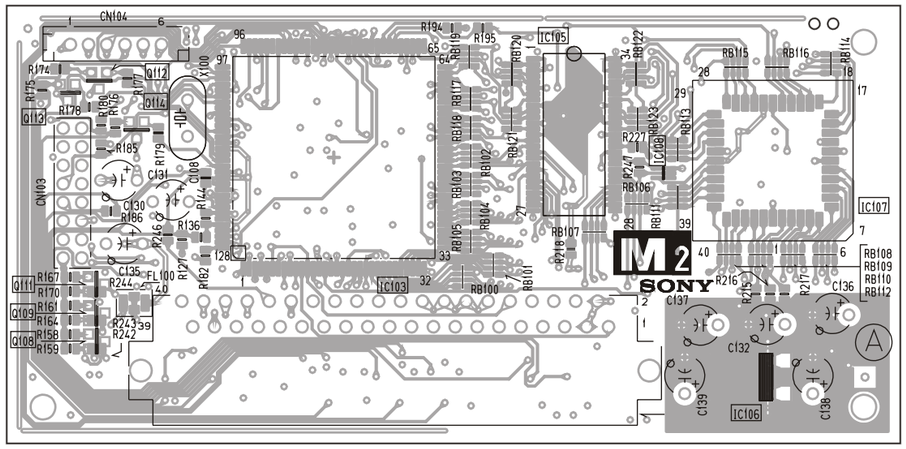

~ M2 Printed Wiring Board Conductor side B ~

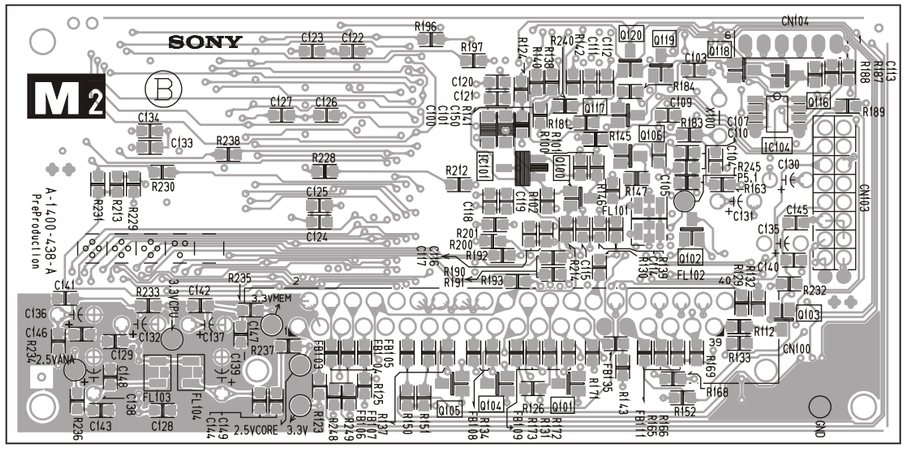

~ M2 Board IC Voltages ~

Ref No	Pin No	Voltage (V)
IC103	1-3	0.4
	4-5	3.3
	6	0
	7	3.3
	8	2.9
	9	3.6
	10	3.3
	11	3.3
	12-13	0
	14-15	3.3
	16	0
	17	0.5
	18	0
	19	0.5
	20	0
	21	2.5
	22-23	0
	24	2.4
	25	1.6
	26	2.4
	27	2.5
	28-29	0.2
	30-31	0
	32	3.3
	33	0.7
	34-37	0.8
	38	3.1
	39	2.1
	40	1.5
	41	0
	42	3.3
	43	1.5
	44	3.1
	45	3.3
	46	2.0
	47	2.1
	48-49	0
	50	3.2
	51	1.9
	52	0
	53	3.3
	54	1.4
	55	0.2
	56	2.0
	57	0.4
	58	1.3
	59	0.7
	60	0
	61	3.3
	62	0.8
	63	0.4
	64	0.8
	65	1.2
	66-67	0.8
	68	0
	69	3.3
	70	0.6
	71	0.8
	72	1.2
	73	3.0
	74-75	2.7
	76	0
	77-78	3.3
	79	0
	80	3.3
	81	0
	82-83	2.8
	84	0
	85	3.3
	86	0
	87	2.5

Ref No	Pin No	Voltage (V)
IC103	88	3.3
	89	2.8
	90	3.3
	91	2.8
	92	3.3
	93-94	0.4
	95	2.7
	96-97	3.3
	98-99	3.0
	100	3.3
	101	3.3
	102	0
	103	0.2
	104	0
	105	0
	106	3.3
	107	0
	108	0.7
	109	0.4
	110	0
	111	2.5
	112	0.3
	113	0.3
	114	0.3
	115	0
	116	2.5
	117	0
	118	0
	119	2.5
	120	0
	121	1.2
	122	0
	123	2.5
	124	0
	125	2.5
	126	0.6
	127	0.6
	128	0
IC104	1-4	0
	5-6	3.0
	7-8	3.3
IC105	1	3.3
	2	0.2
	3	3.3
	4	0.7
	5	1.2
	6	0
	7	0.8
	8	0.5
	9	3.3
	10	0.9
	11	1.3
	12	0
	13	1.3
	14	3.3
	15	0
	16	3.3
	17-18	1.8
	19	3.1
	20	0.6
	21	3.1
	22	0.2
	23-26	0.9
	27	3.3
	28	0
	29	0.8
	30-31	2.4
	32	2.1
	33	1.5
	34	2.0
	35	0.2

Ref No	Pin No	Voltage (V)
IC105	36	0
	37	3.3
	38	1.5
	39-41	0
	42	0.2
	43	3.3
	44	0.2
	45	0.8
	46	0
	47	1.2
	48	0.8
	49	3.3
	50	0.6
	51	1.9
	52	0
	53	1.9
	54	0
IC107	1-2	0
	3	0.6
	4	2.0
	5-6	2.4
	7	0.8
	8-11	0.9
	12	1.4
	13	0
	14	2.1
	15	0.2
	16	0.4
	17	0.8
	18	0.2
	19	1.2
	20-21	0.9
	22	1.2
	23	0
	24	3.3
	25	0.5
	26-28	0.9
	29	1.4
	30	2.1
	31	1.4
	32	2.0
	33	0
	34	3.3
	35	0
	36-37	1.8
	38	3.0
	39	0.7
	40-41	0.2
	42	2.1
	43	1.6
	44	0.7

~ M2 Board Semiconductor Voltages ~

Ref	(s)	(g)	(d)
Q108	2.7	3.3	4.7
Q109	2.7	3.3	4.8
Q111	3.3	3.3	4.9
Ref	**(e)**	**(b)**	**(c)**
Q101	0	0.7	0
Q103	0	0	4.1
Q104	0	0.7	0
Q105	0	0	4.9
Q106	0	0.7	0
Q112	0.9	0.3	0
Q113	0.9	0.3	0
Q114	0.9	0.3	0
Q116	2.6	0	3.0
Q117	0	0.7	0
Q118	3.0	0	2.6
Q119	2.6	0	3.0
Q120	3.0	0	2.6

~ D2 Board IC Voltages ~

Ref No	Pin No	Voltage (V)	Ref No	Pin No	Voltage (V)
IC6800	1	1.6	IC6802	1-4	0
	2	1.8		5	6.8
	3	2.3		6	6.7
	4	2.5		7	6.7
	5-6	0		8	14.2
	7	4.6	IC6803	1-2	0
	8	13.9		3	1.7
	9	0		4	1.2
	10	10.2		5	0
	11	0	IC6807	1	2.5
	12	4.4		2	0
	18	196.0		3	2.5
IC6801	1	0			
	2	2.5			
	3	2.1			
	4	0			
	5	2.2			
	6	2.5			
	7	0			
	8	14.7			

~ D2 Printed Wiring Board Conductor Side~

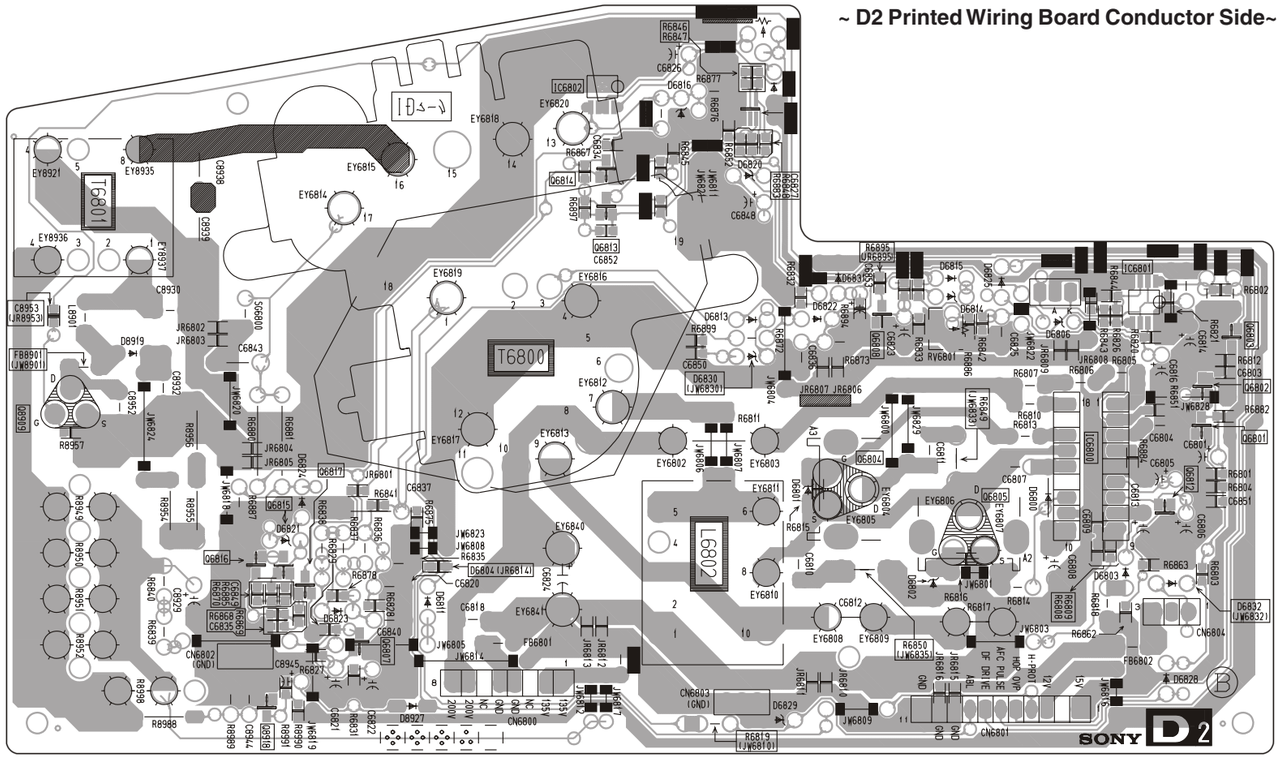

~ D2 Board Semiconductor Voltages ~

Ref	(e)	(b)	(c)
Q6801	0	0.6	0
Q6802	0	0	1.6
Q6803	0	0	1.6
Q6807	0	0.6	0
Q6808	0	0.6	0
Q6813	11.9	11.4	1.2
Q6814	0	0	11.9
Q6815	11.9	11.9	0
Q6816	0	0	11.7
Q6817	11.9	11.7	0
Q8918	0	6.4	0

~ D2 Board Difference Table ~

Ref	KV-32FQ80	KV-36FQ80
C8952	330PF 10.00% 500	-
R6825	510K 0.5% 1/10W	150K 0.5% 1/16W
R6827	22K 0.5% 1/10W	47K 0.5% 1/10W
R6837	5.6K 1% 1/4W	6.8K 1% 1/4W
R6838	5.6K 1% 1/4W	4.7K 1% 1/4W
R6840	5.6K 1% 1/4W	10K 1% 1/4W
R6841	1K 0.5% 1/10W	560 0.5% 1/10W

~ D2 Board Location Table ~

DIODE		D6803	O - 5	D6813	L - 3	D6817	L - 2	D6823	I - 5	D6829	L - 5	**IC**		IC6803	L - 2	Q6802	O - 3	Q6807	J - 5	Q6815	I - 4
D6800	N - 4	D6804	J - 4	D6814	N - 3	D6820	L - 2	D6824	I - 4	D6830	L - 3	IC6800	N - 4	IC6807	O - 3	Q6803	O - 3	Q6808	M - 3	Q6816	I - 4
D6801	L - 4	D6806	N - 3	D6815	M - 3	D6821	I - 4	D6825	N - 3	D8919	H - 3	IC6801	O - 3	**TRANSISTOR**		Q6804	M - 4	Q6813	K - 2	Q6817	I - 5
D6802	M - 5	D6811	J - 5	D6816	L - 2	D6822	M - 3	D6828	O - 5	D8927	J - 5	IC6802	K - 1	Q6801	O - 4	Q6805	N - 4	Q6814	K - 2	Q8909	H - 3

D2.-32/36FQ80

D2 DYNAMIC PICTURE STABLISING CIRCUIT

SS RESET

HV OVERSHOOT PROTECT

AFC PULSE DETECT

OVP

ABL PROTECT

UNDER VOLTAGE PROTECTION

DYNAMIC FOCUS

TO G BOARD CN6010

TO A BOARD CN1903

COMPONENTS MARKED AS XX ARE NOT FITTED ON THIS MODEL

~ D2 Board Schematic Diagram [Dynamic Picture Stabilising Circuit] ~

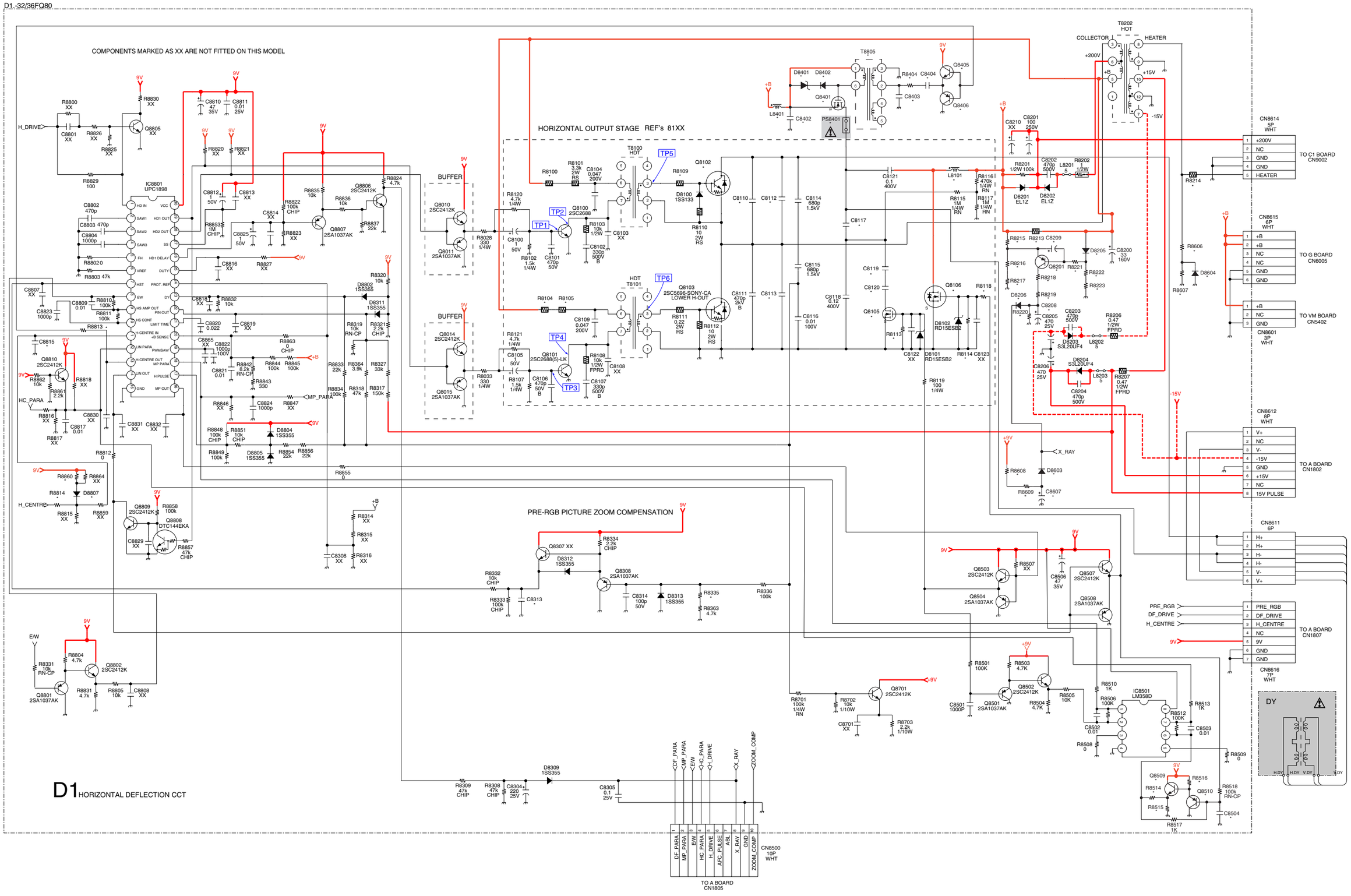

~ D1 Board Schematic Diagram [Horizontal Deflection] ~

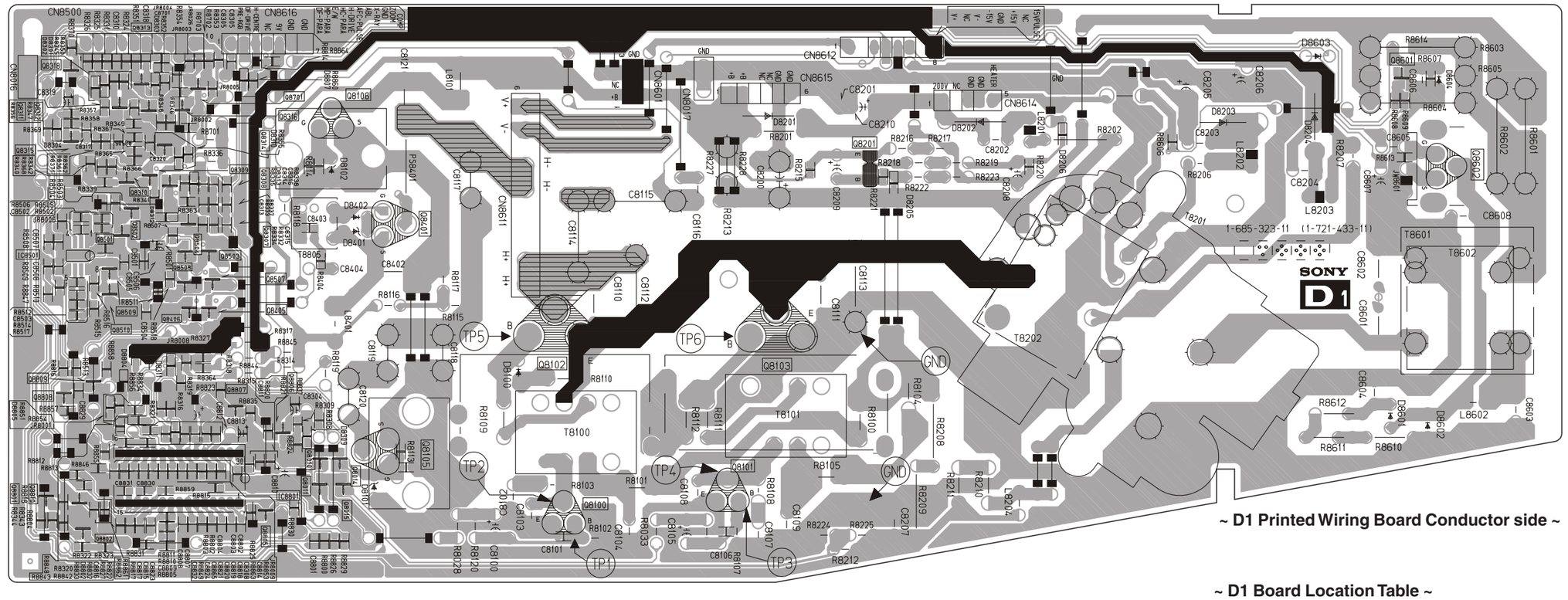

~ D1 Printed Wiring Board Conductor side ~

~ D1 Board Semiconductor Voltages ~

Ref	(s)	(g)	(d)
Q8105	0	3.2	21.1
Q8106	0	1.1	135.2
Ref	**(e)**	**(b)**	**(c)**
Q8010	4.0	3.9	8.9
Q8011	4.0	3.9	0
Q8014	3.9	3.8	8.9
Q8015	3.9	3.8	0
Q8308	0.9	0.2	0
Q8503	3.2	3.2	8.9
Q8504	3.2	3.2	0
Q8507	1.1	1.0	8.9
Q8508	1.1	1.0	0
Q8701	0.5	0	8.9
Q8806	0	0.7	0
Q8807	4.4	3.8	0
Q8808	0	2.1	0
Q8809	0	0	1.0

~ D1 Board IC Voltages ~

Ref No	Pin No	Voltage (V)	Ref No	Pin No	Voltage (V	Ref No	Pin No	Voltage (V	Ref No	Pin No	Voltage (V	Ref No	Pin No	Voltage (V
IC8801	1	4.4	IC8801	7	3.7	IC8801	13	3.0	IC8801	19	2.6	IC8801	25	4.2
	2	2.7		8	3.7		14	1.0		20	5.5		26	3.8
	3	3.4		9	3.2		15	0		21	2.6		27	2.7
	4	1.4		10	3.2		16	3.2		22	1.0		28	3.9
	5	0		11	1.3		17	1.7		23	1.0		29	3.8
	6	3.0		12	2.1		18	3.2		24	5.5		30	8.8

~ D1 Board Location Table ~

DIODE				TRANSISTOR					
D8100	E - 4	D8311	B - 4	Q8010	D - 5	Q8105	D - 5	Q8801	A - 5
D8101	D - 5	D8312	B - 3	Q8011	D - 5	Q8106	D - 2	Q8802	B - 6
D8102	D - 2	D8313	C - 3	Q8014	D - 5	Q8501	B - 3	Q8806	C - 5
D8201	H - 2	D8802	B - 5	Q8015	D - 5	Q8502	B - 3	Q8807	C - 4
D8202	I - 2	D8804	B - 4	Q8100	F - 5	Q8503	C - 3	Q8808	B - 4
D8203	K - 2	D8805	B - 4	Q8101	G - 5	Q8504	C - 3	Q8809	B - 4
D8204	L - 2	IC		Q8102	F - 4	Q8507	C - 3	Q8810	A - 5
D8309	D - 5	IC8501	A - 3	Q8103	H - 4	Q8508	C - 3		
		IC8801	C - 5	Q8201	C - 2	Q8701	C - 2		

~ D1 Board Waveforms ~

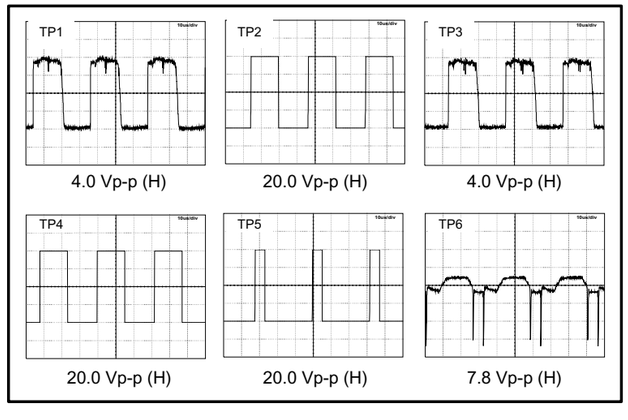

~ D1 Board DifferenceTable ~

Ref	KV-32FQ80	KV-36FQ80	Ref	KV-32FQ80	KV-36FQ80	Ref	KV-32FQ80	KV-36FQ80	Ref	KV-32FQ80	KV-36FQ80	Ref	KV-32FQ80	KV-36FQ80	Ref	KV-32FQ80	KV-36FQ80
C8110	220PF 10.00% 2KV	100PF 5.00% 2KV	C8404	-	1UF 5.00% 50V	L8101	2.2MH	1.5MH	Q8510	-	2SA103AK--T146R	R8216	-	39K 1% 1/4W	R8515	-	4.7K 5% 1/10W
C8112	6800PF 3.00% 1.5	13000PF 3.00% 1.5	C8504	0.0022UF 10.00% 50V	0.001UF 10.00% 50V	L8401	-	4.7MH	R8100	4.7K 5% 2W	3.9K 5% 2W	R8217	-	39K 1% 1/4W	R8516	-	4.7K 5% 1/10W
C8113	6200PF 3.00% 1.5	8200PF 3.00% 1.5	C8607	-	10UF 20.00% 50V	PS84-01	-	LINK, IC	R8104	4.7K 5% 3W	3.3K 5% 3W	R8218	-	100K 1% 1/4W	R8606	-	22K 5% 1/10W
C8117	0.56UF 5.00% 250	0.68UF 5.00% 400	C8815	-	0.01UF 10.00% 25V	Q8102	2SC5698-S-ONYCA	2SC5698-C-A	R8105	4.7K 5% 3W	3.3K 5% 3W	R8219	-	100K 1% 1/4W	R8607	-	22K 5% 1/10W
C8119	0.18UF 5% 250	0.33UF 5.00% 250	D8205	-	1SS355TE--17	Q8105	IRF614-005	IRF1740G	R8109	-	0.22 5% 2W	R8220	-	22K 5% 1/10W	R8608	-	100K 5% 1/10W
C8120	0.18UF 5% 250	0.27UF 5.00% 250	D8206	-	1SS355TE--17	Q8106	STP5NB40-FP	IRF1740G	R8113	-	470K 5% 1/10W	R8221	-	10K 5% 1/10W	R8609	-	22K 5% 1/10W
C8208	-	100UF 20.00% 25V	D8401	-	RD15ESB2	Q8201	-	2SA1208S--TP	R8114	-	100K 5% 1/10W	R8222	-	100K 1% 1/4W	R8813	-	SHORT 0
C8209	-	100UF 20.00% 25V	D8402	-	1SS133T-77	Q8401	-	IRF1740G	R8118	100 5% 1/4W	4.7K 5% 1/4W	R8223	-	100K 1% 1/4W	R8814	-	22K 0.5% 1/10W
C8313	0.001UF 10.00% 50V	0.001UF 5.00% 25V	D8603	-	1SS133T-77	Q8405	-	2SC2412K--T-146R	R8213	-	1.5 5% 2W	R8335	-	5.6K 0.5% 1/10W	R8860	-	27K 0.5% 1/10W
C8402	-	0.047UF 5.00% 400	D8604	-	1SS133T-77	Q8406	-	2SA103AK--T146R	R8214	0.68 5% 2W	0.39 5% 2W	R8404	-	47 5% 1/10W	T8805	-	TRANSFO-RMER, DRIVE
C8403	-	470PF 10.00% 50V	D8807	-	1SS355TE--17	Q8509	-	2SC2412K--T-146R	R8215	-	1K 0.5% 1/10W	R8514	-	10K 5% 1/10W			

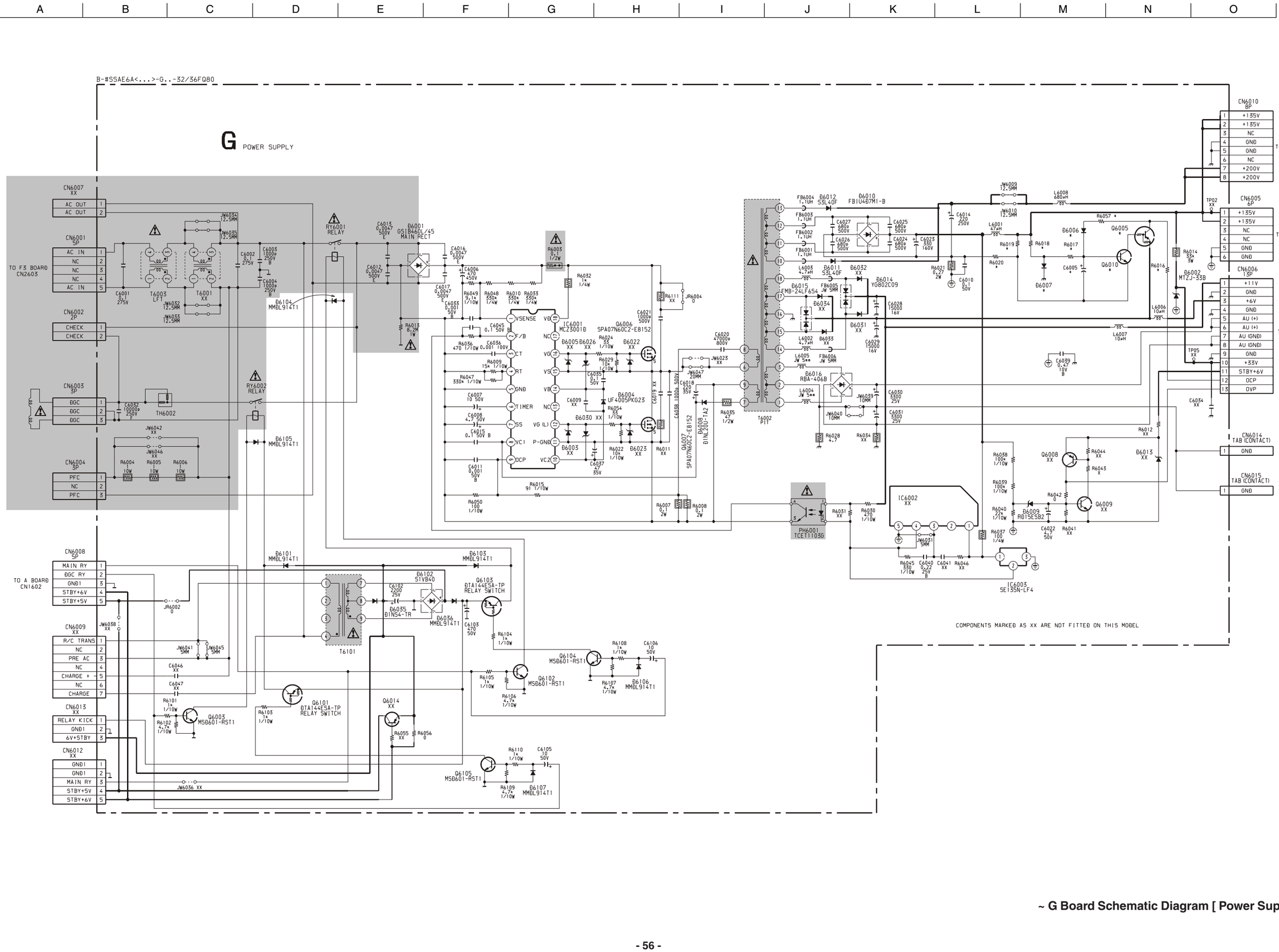

~ G Board Schematic Diagram [Power Supply] ~

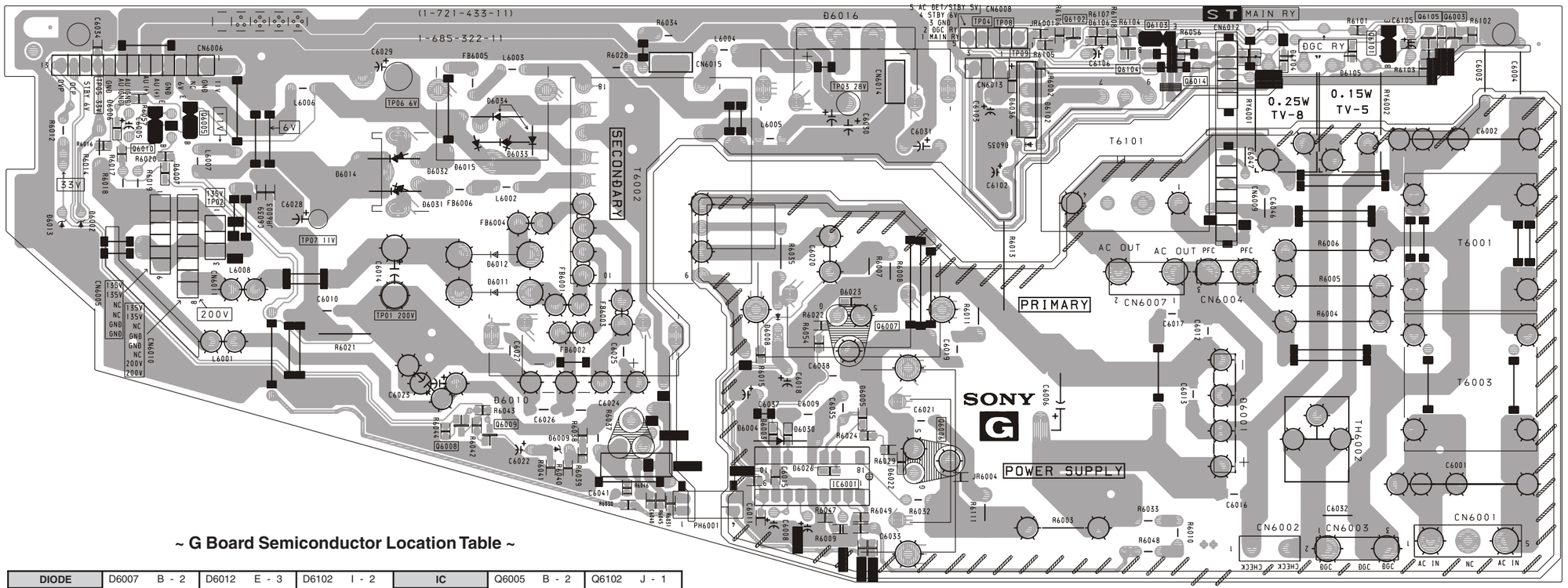

~ G Printed Wiring Board Conductor side ~

~ G Board Semiconductor Location Table ~

DIODE						IC				TRANSISTOR			
D6001	K - 4	D6007	B - 2	D6012	E - 3	D6102	I - 2	IC6001	H - 5	Q6005	B - 2	Q6102	J - 1
D6002	A - 2	D6008	G - 3	D6014	D - 2	D6104	K - 1	IC6003	F - 4	Q6006	H - 4	Q6103	J - 1
D6004	G - 4	D6009	E - 4	D6015	E - 2	D6105	L - 1			Q6007	H - 3	Q6104	J - 1
D6006	B - 2	D6010	E - 4	D6016	H - 1	D6106	J - 1			Q6010	B - 2	Q6105	M - 1
		D6011	E - 3	D6035	I - 2	D6107	M - 1			Q6101	L - 1		

~ G Board IC Voltages ~

IC Voltage Table		
Ref No	Pin No	Voltage (V)
IC6003	1	134.0
	2	11.3
	3	0

~ G Board Semiconductor Voltages ~

Ref	(e)	(b)	(c)
Q6003	0	0.3	10.9
Q6005	7.1	6.9	0.6
Q6010	0	0.5	6.9
Q6101	23.8	23.6	11.0
Q6102	0	0.7	0
Q6103	23.7	23.4	10.4
Q6104	0	0	23.4
Q6105	0	0	23.6

~ VM Printed Wiring Board Conductor side ~

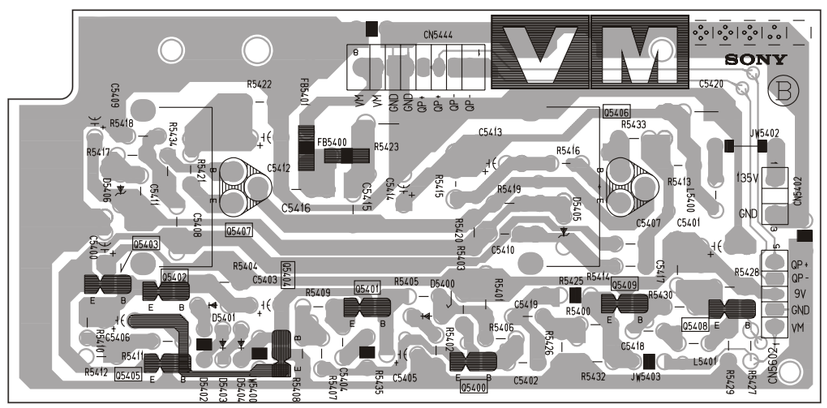

~ VM Board Waveforms ~

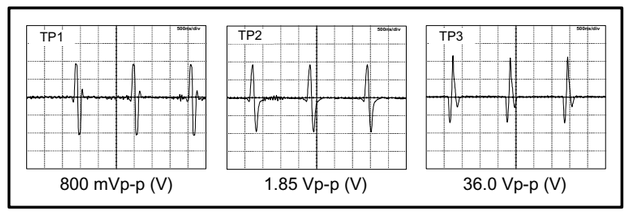

~ VM Board Semiconductor Voltages ~

Ref	(e)	(b)	(c)
Q5400	0.9	1.5	8.8
Q5401	0.9	1.6	5.0
Q5402	5.8	6.4	8.8
Q5403	5.6	5.8	8.8
Q5404	5.6	5.0	0
Q5405	5.6	5.6	0
Q5406	133.9	133.6	67.2
Q5407	1.0	1.3	67.2
Q5408	3.9	3.1	3.9
Q5409	3.9	3.2	8.8

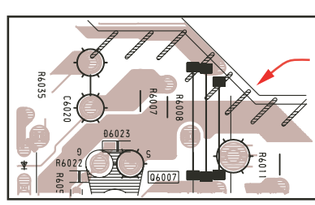

Note :
Portions of the circuit contained within the marked areas as shown have high voltages present. Use care to prevent electric shock during inspection or repair. An Isolation Transformer must be used during any Service work to avoid possible shock hazard due to live chassis. The chassis of this receiver is directly connected to the power line.

~ B5 Board Schematic Diagram [Picture Decoder, DRC, Digital Noise Reduction] Page 7/8 ~

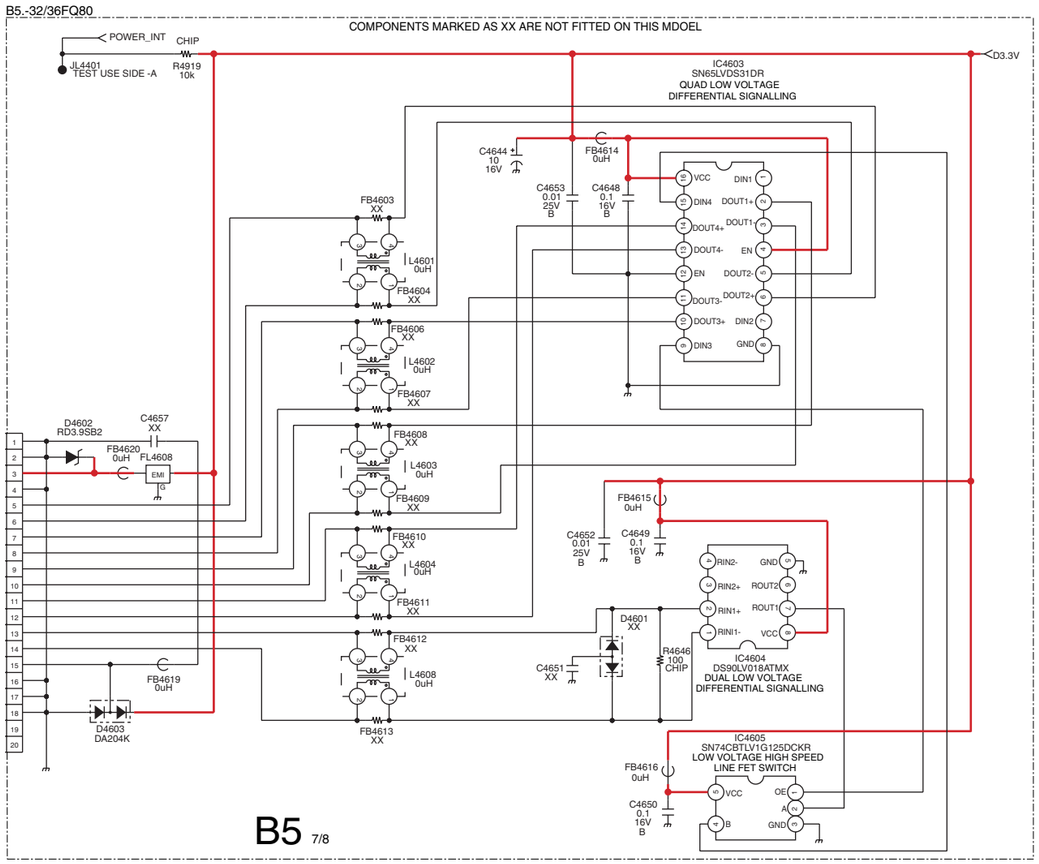

~ B5 Board Schematic Diagram [Picture Decoder, DRC, Digital Noise Reduction] Page 5/8 ~

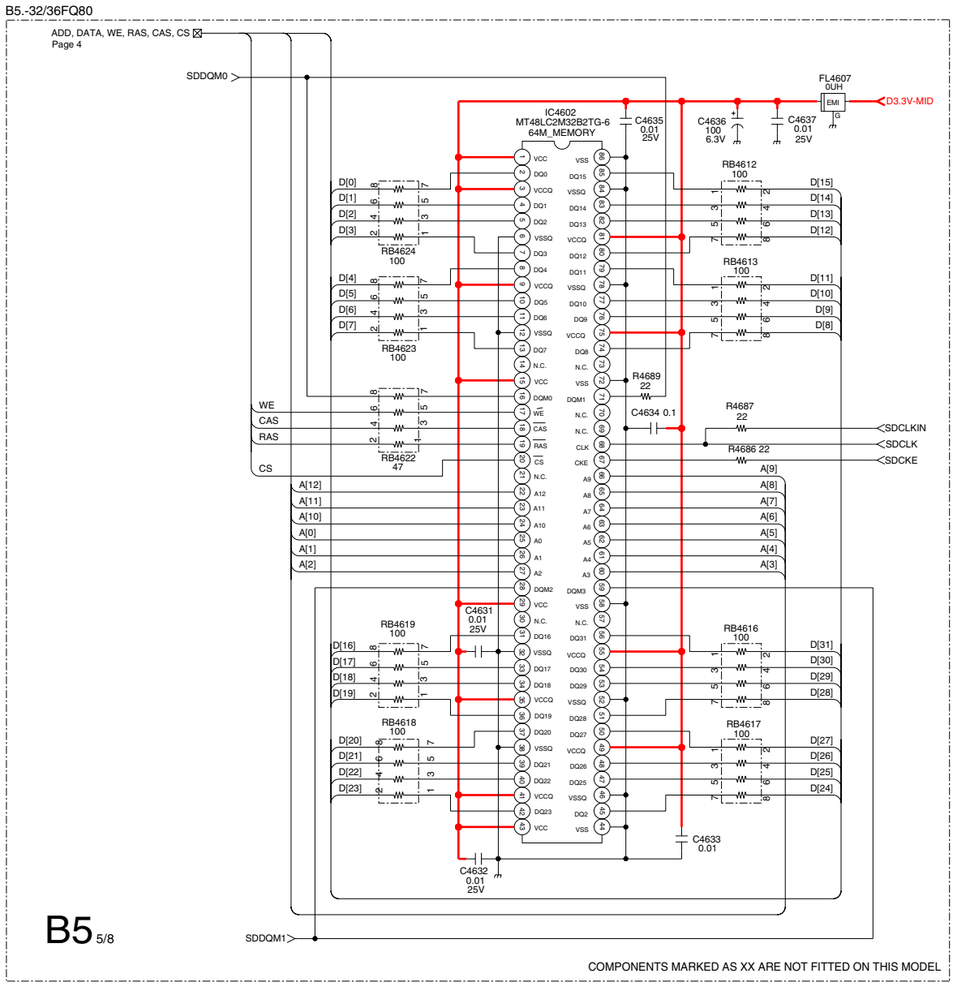

~ VM Board Schematic Diagram [Velocity Modulation] ~

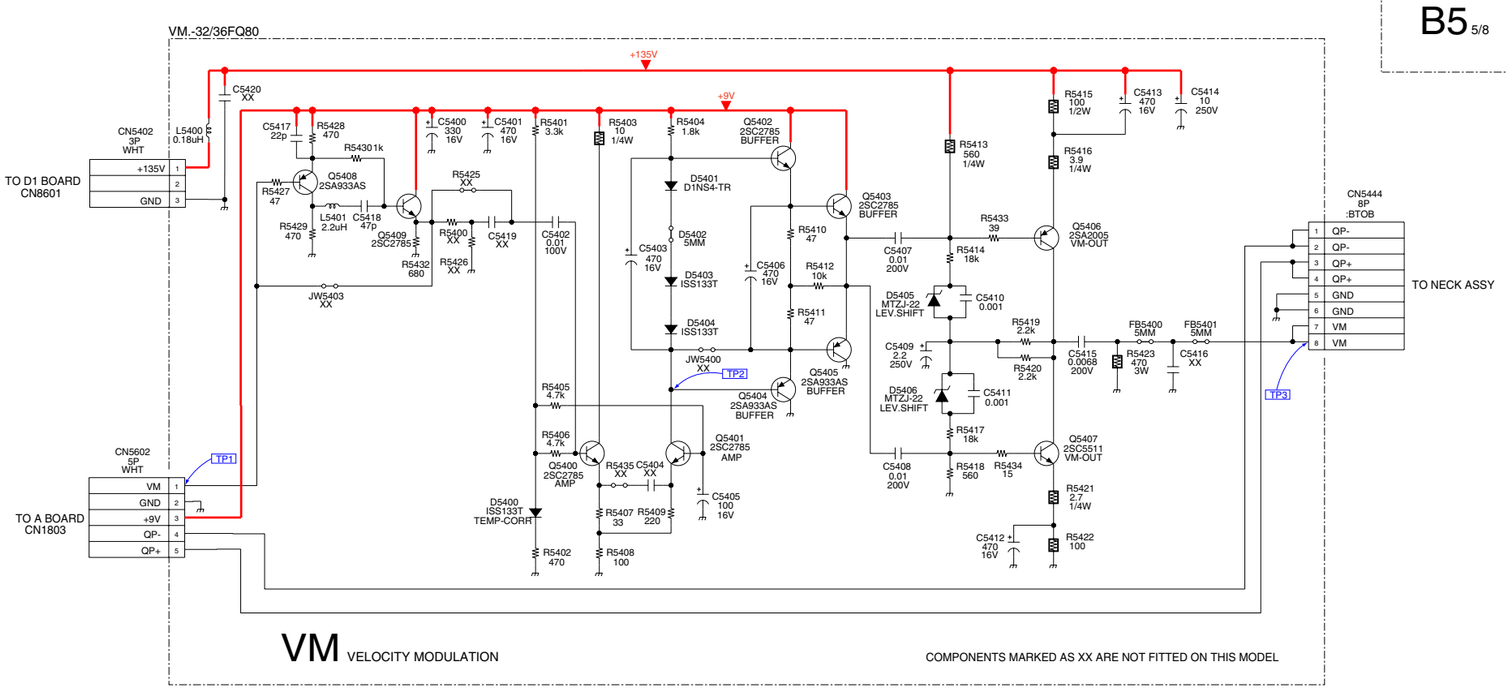

B5.-32/36FQ80

B5 1/8 PICTURE DECODER, DRC, DIGITAL NOISE REDUCTION

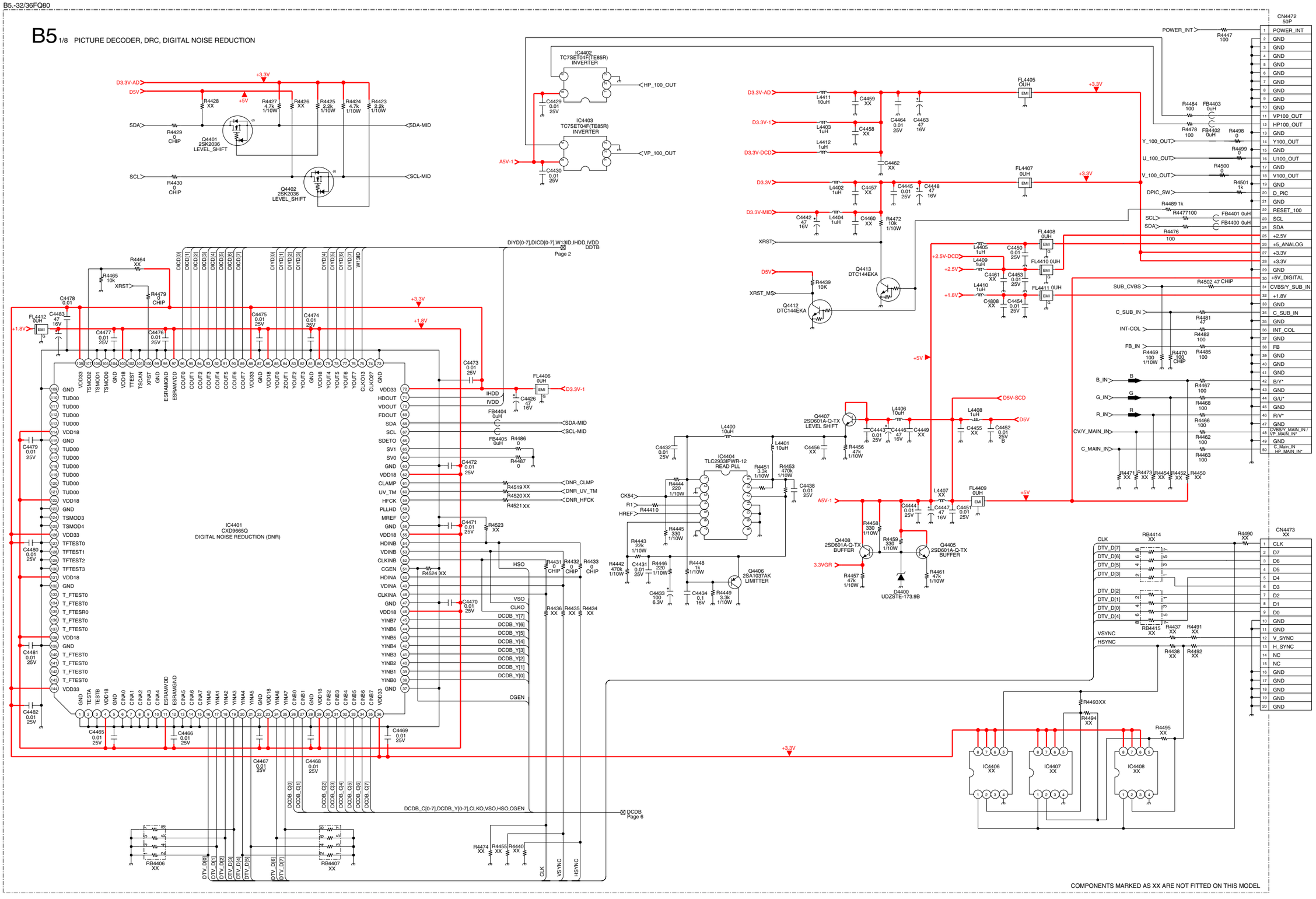

~ B5 Board Schematic Diagram [Picture Decoder, DRC, Digital Noise Reduction] Page 1/8~

B5.-32/36FQ80

COMPONENTS MARKED AS XX ARE NOT FITTED ON THIS MODEL

DIYD[0-7],DICD[0-7],W13ID,IHDD,IVDD
DDTB
Page 1

IC4203
CXD2095AQ
DIGITAL REALITY CREATION (DRC-MF)

IC4201
W981616BH-7-EL10
16Mb SDRAM

IC4200
XX

B5 2/8

~ B5 Board Schematic Diagram [Picture Decoder, DRC, Digital Noise Reduction] Page 2/8~

B5.-32/36FQ80

B5 3/8

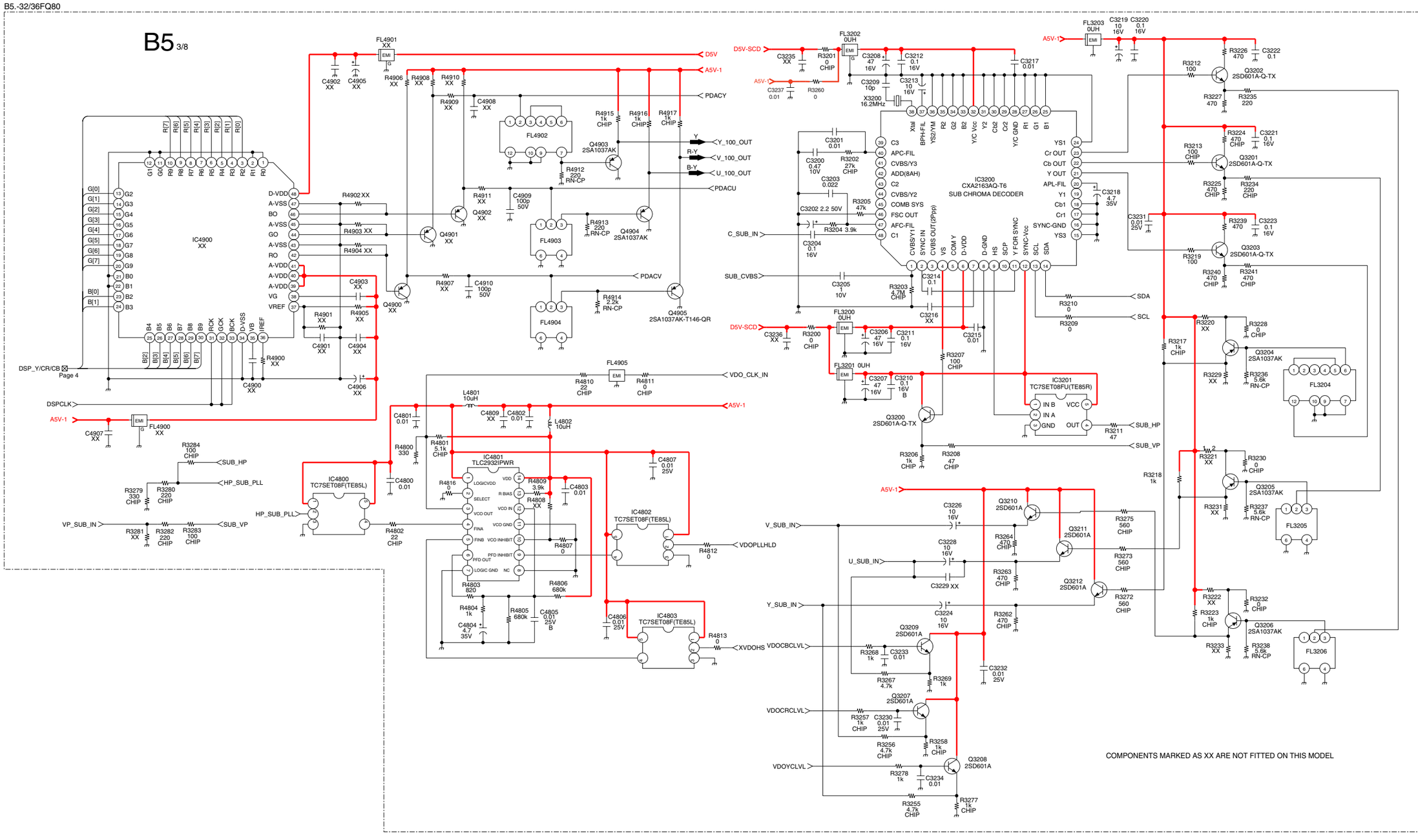

COMPONENTS MARKED AS XX ARE NOT FITTED ON THIS MODEL

~ B5 Board Schematic Diagram [Picture Decoder, DRC, Digital Noise Reduction] Page 3/8~

B5_32/36FQ80

B5 4/8

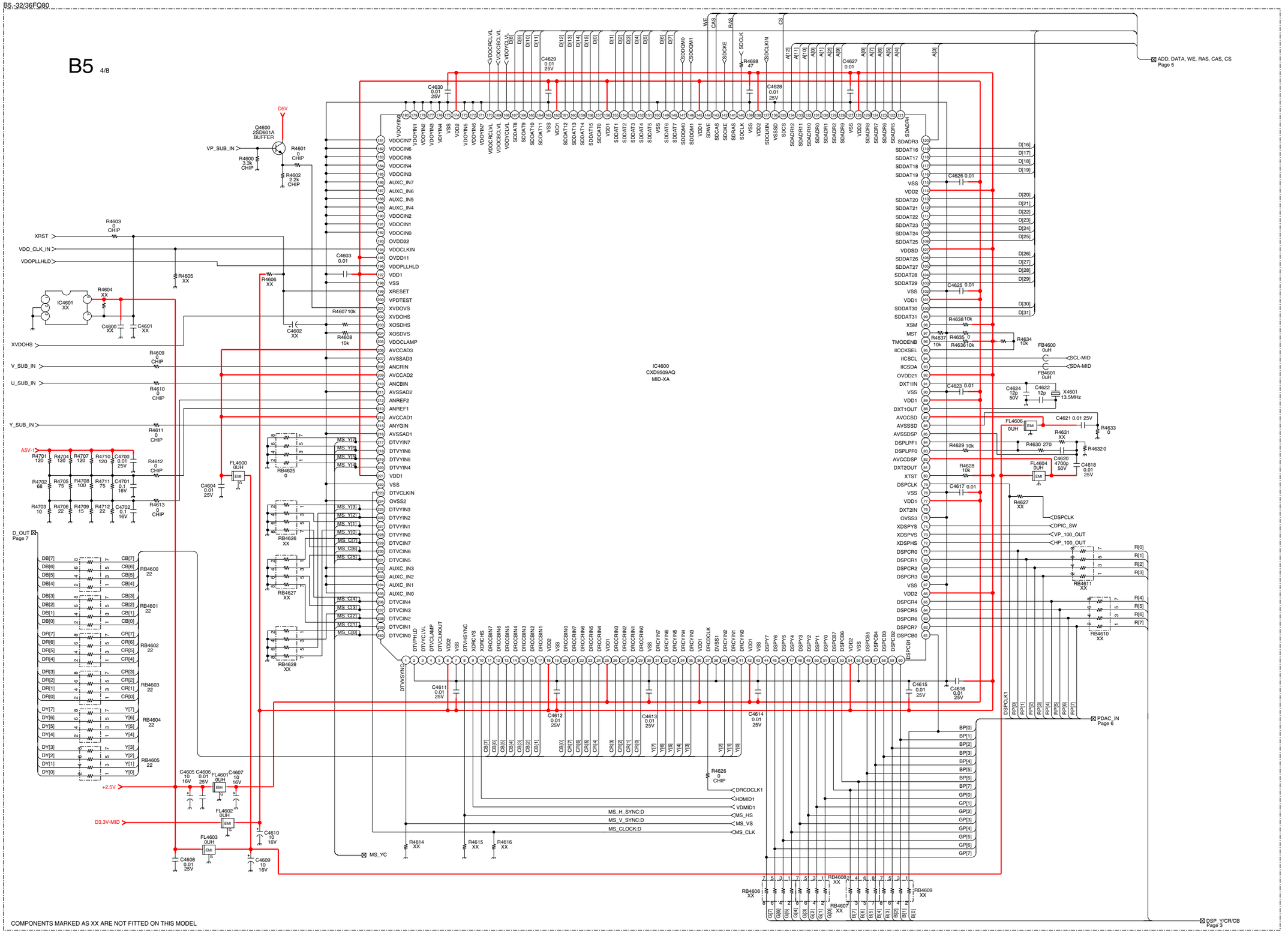

COMPONENTS MARKED AS XX ARE NOT FITTED ON THIS MODEL

~ B5 Board Schematic Diagram [Picture Decoder, DRC, Digital Noise Reduction] Page 4/8~

B5_32/36FQ80

B5 6/8

IC3100
CXD2096Q
DIGITAL CHROMA DECODER

COMPONENTS MARKED AS XX ARE NOT FITTED ON THIS MODEL

~ B5 Board Schematic Diagram [Picture Decoder, DRC, Digital Noise Reduction] Page 6/8~

B5.-32/36FQ80

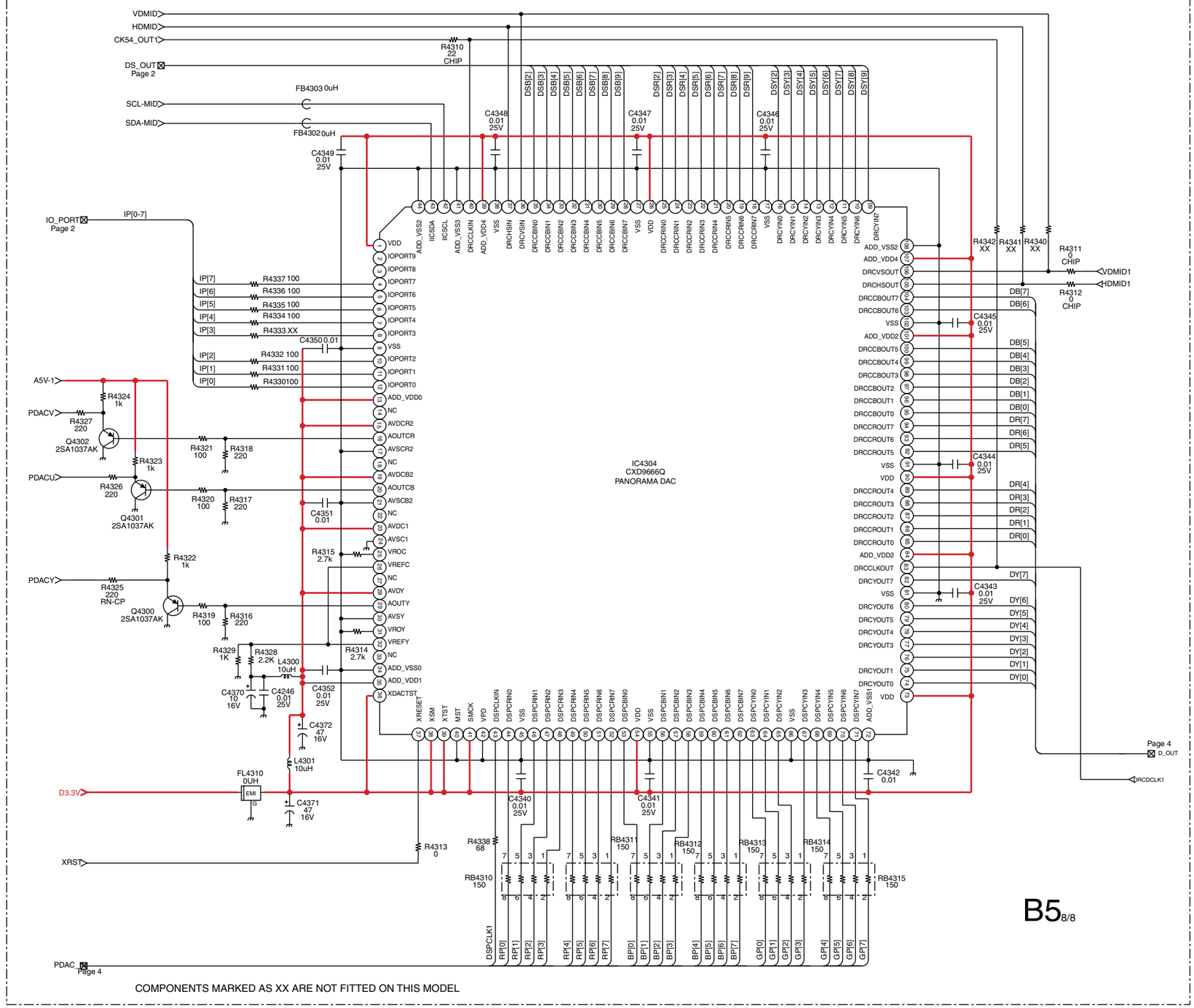

~ B5 Board Schematic Diagram [Picture Decoder, DRC, Digital Noise Reduction] Page 8/8~

~ B5 Printed Wiring Board Conductor side A ~

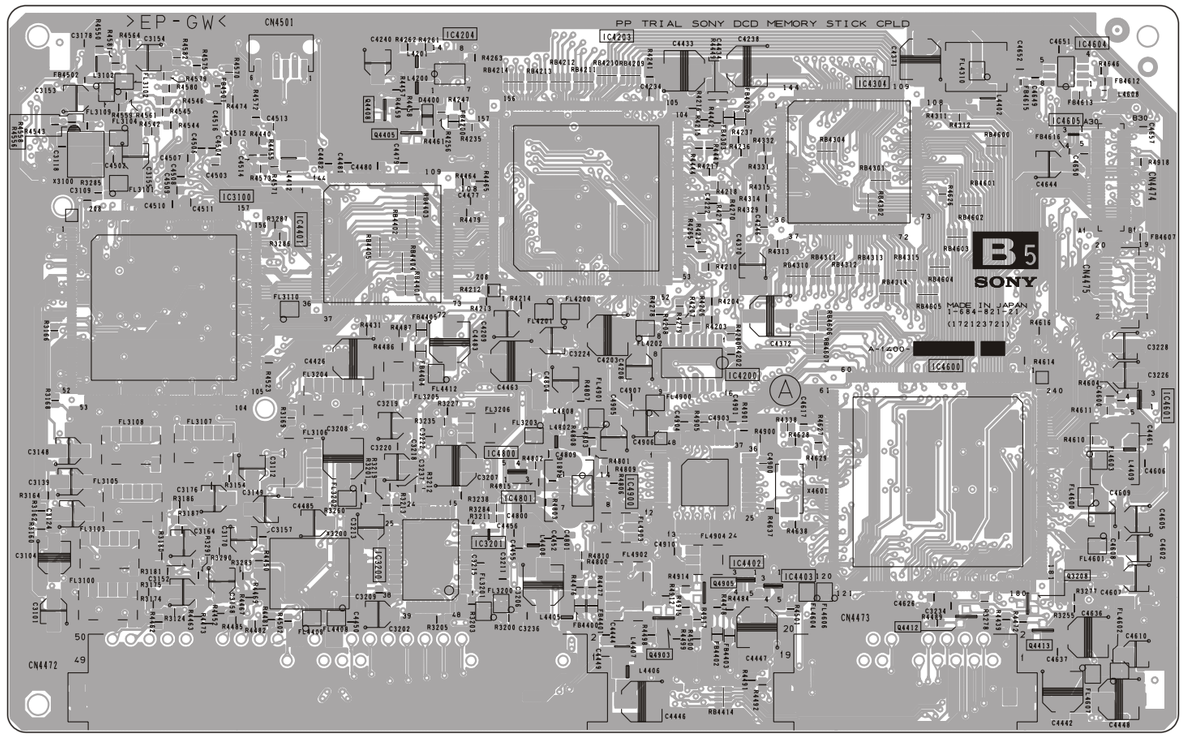

~ B5 Location Table A Side ~

DIODE		IC3201	E - 5	IC4403	G - 5	TRANSISTOR		Q4903	F - 5
D4400	E - 2	IC4200	F - 3	IC4600	H - 4	Q3208	I - 5	Q4905	G - 5
IC		IC4203	F - 2	IC4800	E - 4	Q4405	E - 2		
IC3100	C - 3	IC4401	D - 3	IC4801	E - 4	Q4408	D - 2		
IC3200	D - 5	IC4402	G - 5	IC4900	F - 4	Q4413	I - 5		

~ B5 Printed Wiring Board Conductor side B ~

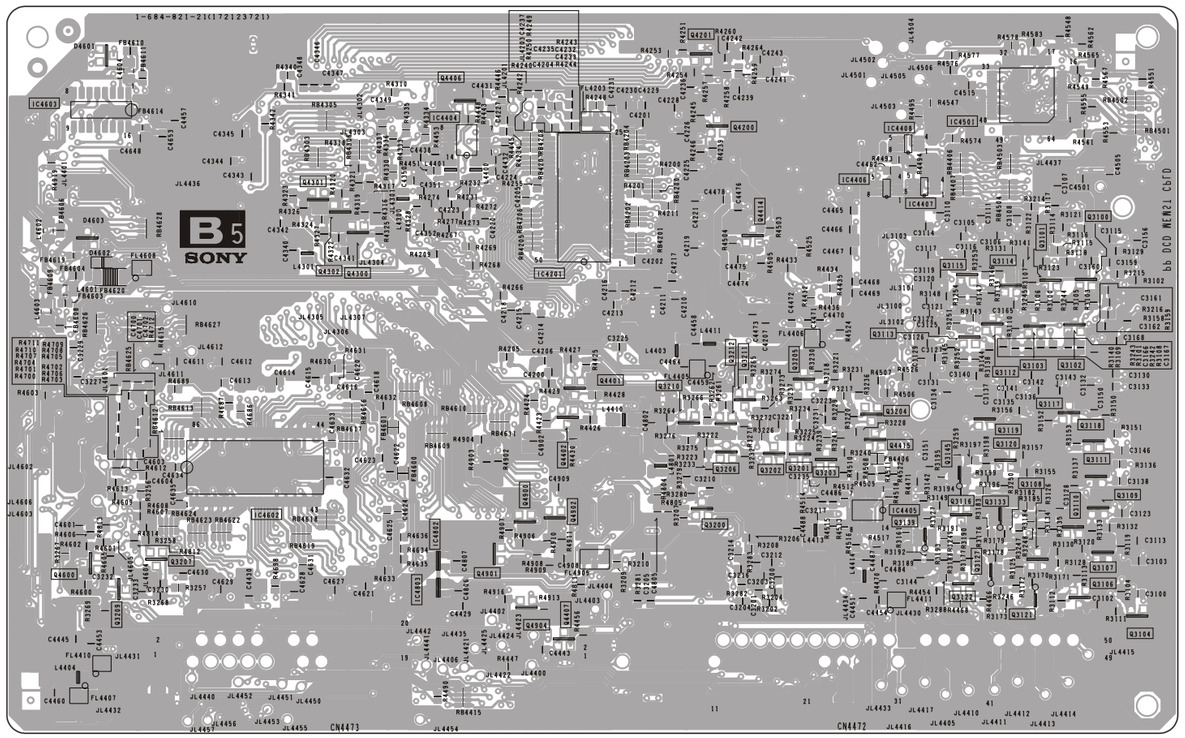

~ B5 Location Table B Side ~

IC		Q3102	I - 8	Q3112	H - 8	Q3122	H - 10	Q3207	C - 10	Q4407	E - 10
IC4201	F - 8	Q3104	I - 10	Q3113	H - 8	Q3200	F - 10	Q3209	C - 10	Q4600	C - 10
IC4404	E - 7	Q3106	I - 10	Q3114	H - 8	Q3201	G - 9	Q3210	G - 9	Q4900	E - 10
IC4602	D - 9	Q3107	I - 10	Q3116	H - 10	Q3202	G - 9	Q3211	G - 9	Q4901	E - 10
IC4802	E - 10	Q3108	I - 10	Q3117	I - 9	Q3203	G - 9	Q3212	G - 9	Q4902	F- 10
IC4803	E - 10	Q3109	I - 10	Q3118	I - 9	Q3204	H - 9	Q4401	F - 9	Q4904	E - 10
TRANSISTOR		Q3110	I - 10	Q3119	H - 9	Q3205	G - 9	Q4402	F - 9		
Q3100	I - 8	Q3111	I - 10	Q3120	H - 9	Q3206	G - 9	Q4406	E - 7		

5-4. SEMICONDUCTORS

BA033T
BA05T
BA12T
SE-012N-LF4

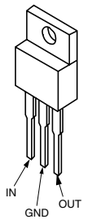

CXAB070AP
MCZ3001D

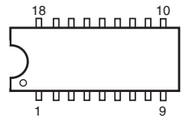

CXA1875AM-T4

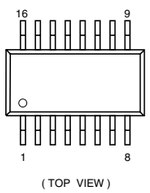

(TOP VIEW)

CXA1855Q
CXA2149AQ-TL
CXA2150AQ-TL
CXA2163AQ-T6

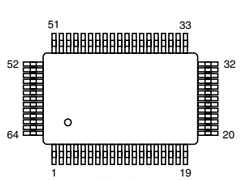

(TOP VIEW)

CXD2088Q-TX
CXD2095AQ
CXD2096Q
CXD2309Q-T6
CXD9509AQ
CXD9665Q
CXD2095AQ

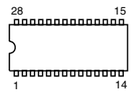

(TOP VIEW)

LA6500-FA

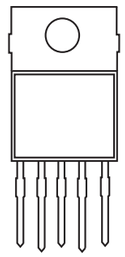

LM318P
LM358D
LM393DT
LM393N
M24C32-WMN6T(A)

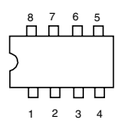

MB88141APF-ER

MSP3411G-QA-B10

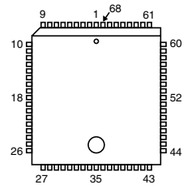

(TOP VIEW)

NJM2903M
NJM2904M
NJM3403AM
UPC4558G2

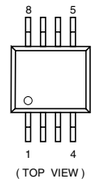

(TOP VIEW)

PQ1CG2032FZ

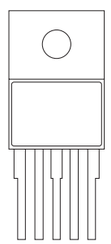

PST573IMT

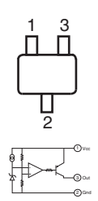

SBX3081-51(30)

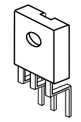

SE-135N
SE135N-LF4

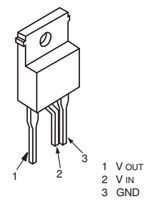

STV9379A

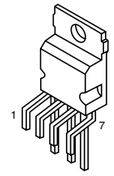

TCET1103G

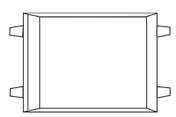

TC7SET04F(TE85R)
TC7SET08F(TE85L)
TC7SET08FU(TE85)

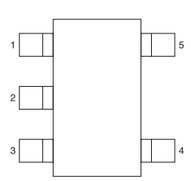

TDA6111Q/N4

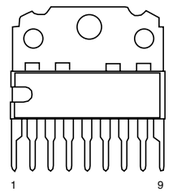

TDA7482

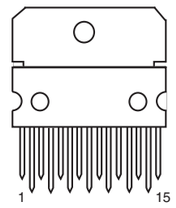

TLC2932IPWR
TLC2933IPWR-12

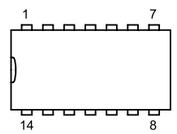

BA12T
BAO33T
IRFI644G-LF36
IRF614-005
IRF720-LF49
IRF620
SPA07N60C2-E8152
2SA1837
2SA2005
2SC5511

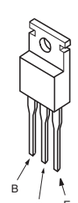

DTA144EKA
DTA144EKA-T146
DTC114EK
DTC114YKA-T146
DTC144EKA
2SA1162-G
2SA1037AK-T146
2SC1623-L5L6
2SC2412K-T-146
2SD601A-Q-TX

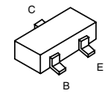

DTA144ESA
2SA933AS-QT
2SC2785-HFE

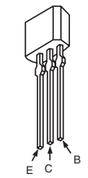

L7809CV/LSY
STP5NB40FP
STP5NB40(030Y)
2SC5698-CA
2S5696-SONY-CA

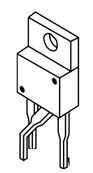

MSB709-RT1
MSD601-RST1
M1MA152WA-T1
UN2111
UN213
2SK2036(TE85L)

2SB733-34

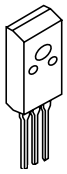

2SC2688(5)-LK

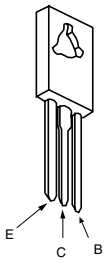

BAS316-115
DTZ-TT11-6.8B
MMDL914T1
UDZS-TE17-12B
UDZSTE-174.7B
UDZSTE-175.1B
UDZSTE-175.6B
UDZSTE-176.2B
UDZSTE-179.1B
UDZSTE-173.9B
UDZ-TE-17-7.5B

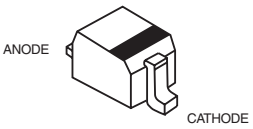

DAN202K

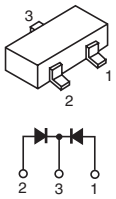

DAP202K

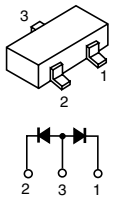

D1NL20U
D1NL20U-TR
D1NL40-TA2
D1NS4
EGP20G
EL1Z
GP08D
RGP10GPKG23
UF4005PKG23

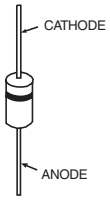

ERA22-08
ERA85-009
HZS9.1NB2
MTZJ-13B
MTZJ-33B
MTZJ-3.6A
MTZJ-30C
MTZJ-7.5B
MTZJ-T-77-15B
MTZJ-T-77-22
MTZJ-T-77-2.2A

RD15ES-B2
RD18ES-B2
RD5.1ESB2
RD5.6ESB2
RD6.8ESB2
RD8.2ESB3
1SS119-25
1SS133T-77
1SS355TE-17
1SS83

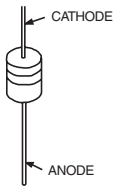

FBIU4D7M1-B
RBA-406B
S1VB40

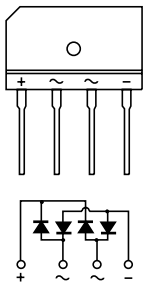

GS1B460/45

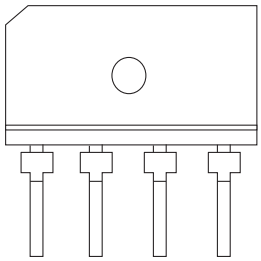

L-59SRSGC-CC

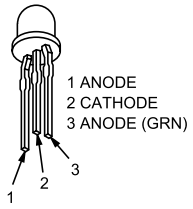

MA3062M-TX
RD5.1M-B2

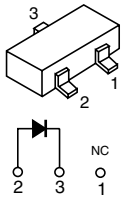

MA73-TX

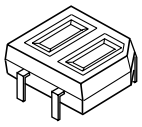

5-5 IC BLOCK DIAGRAMS

J2 BOARD IC3500 TDA8601T

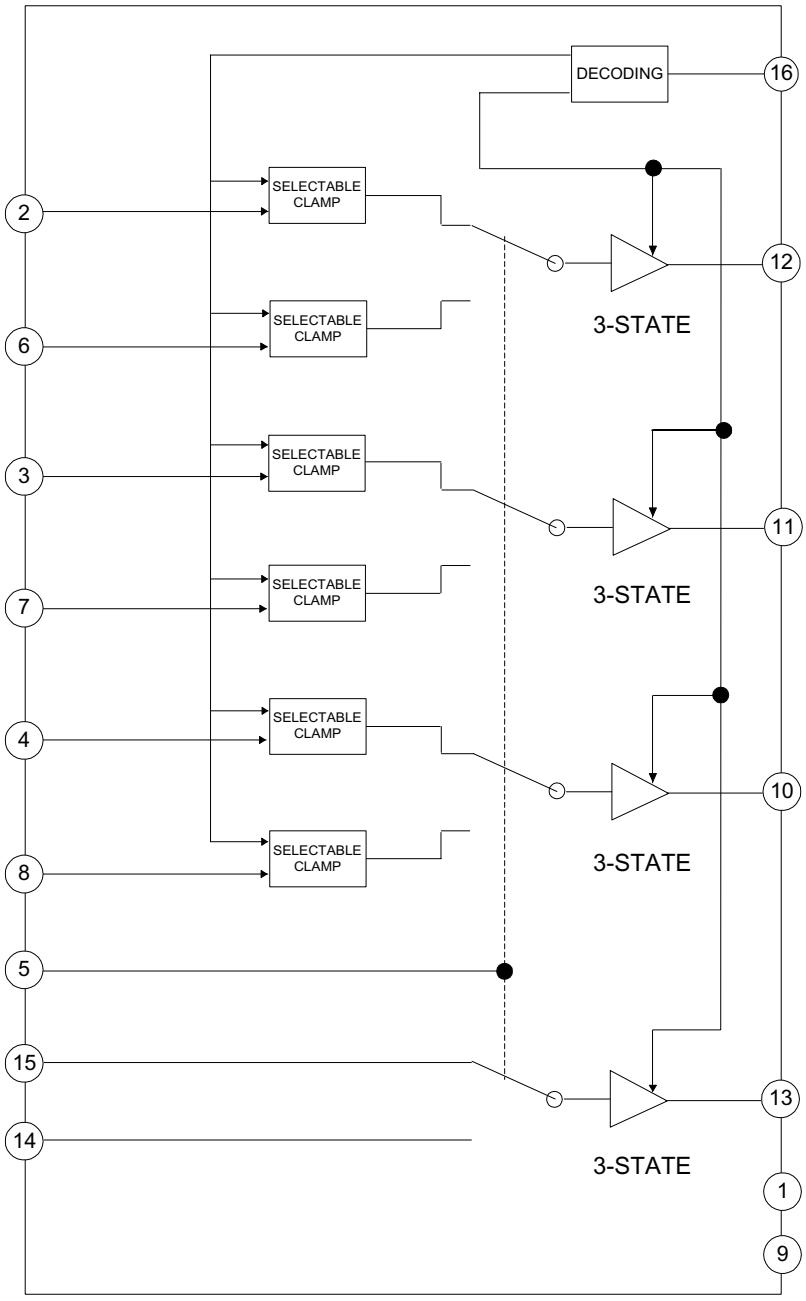

G BOARD IC6001 MCZ3001D
D2 BOARD IC6800 MCZ3001D

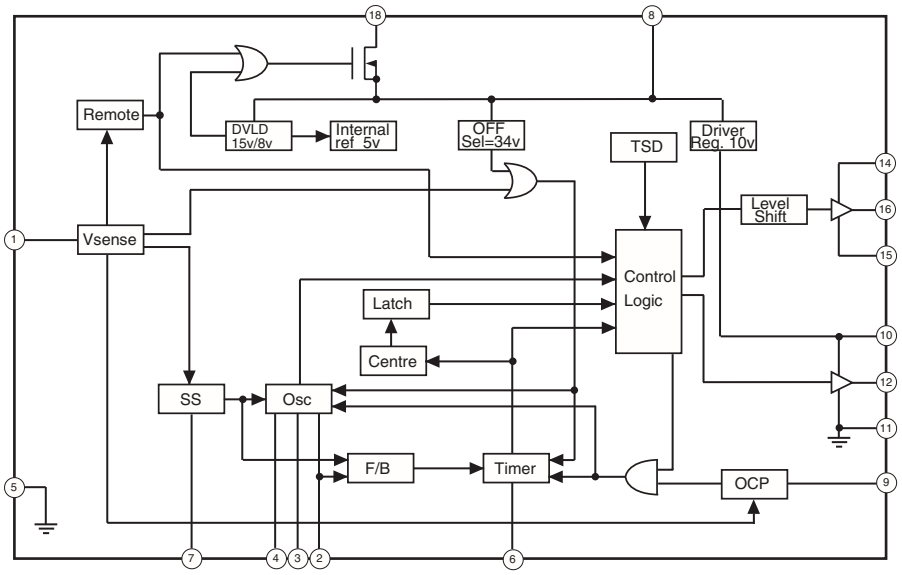

A BOARD IC1231 MSP3411G

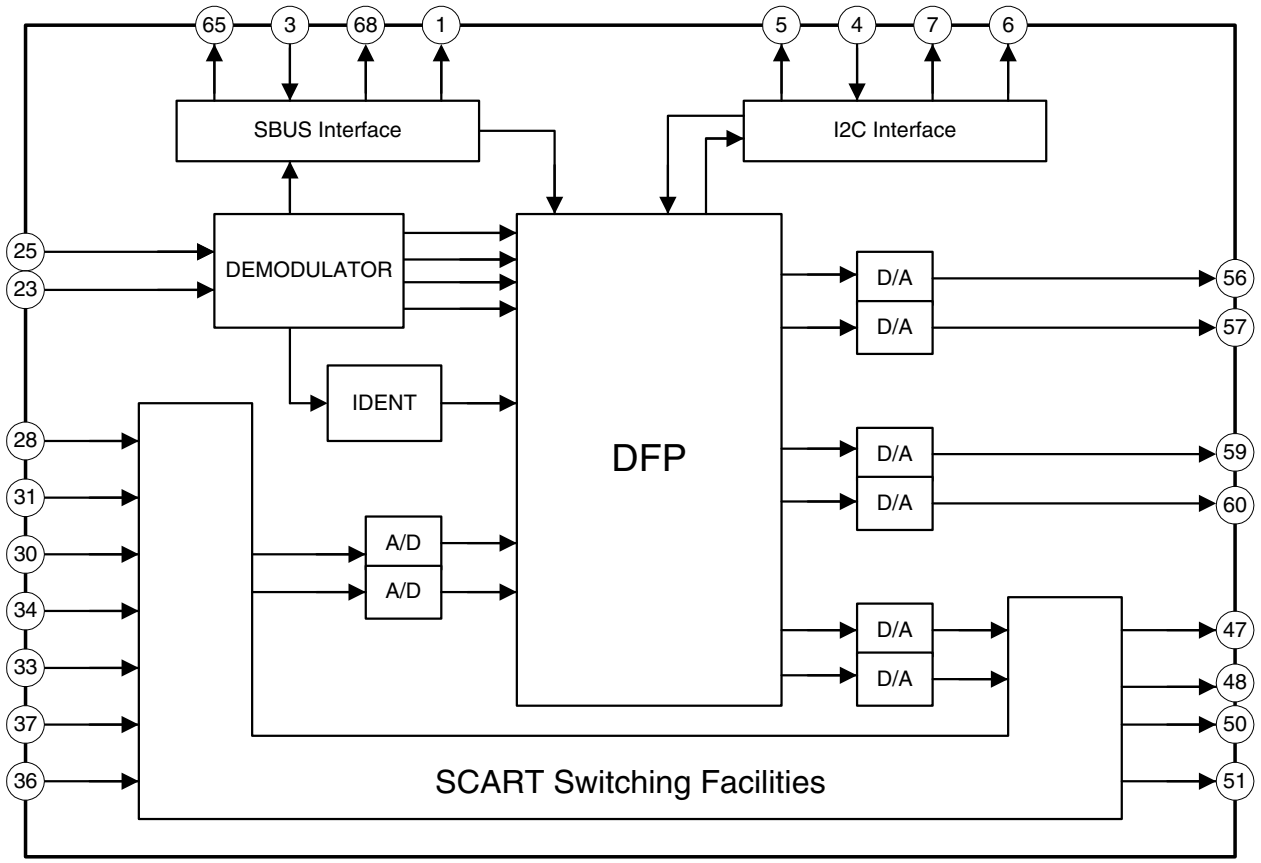

G BOARD IC6003 SE135N-LF4

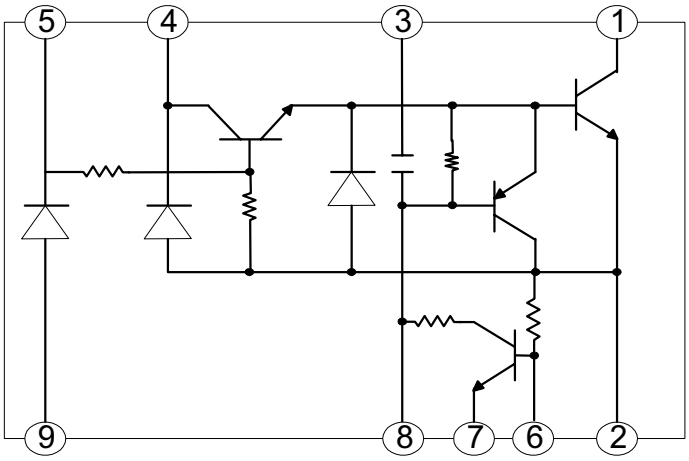

A BOARD IC1801/IC1804/IC1808 LM393DT

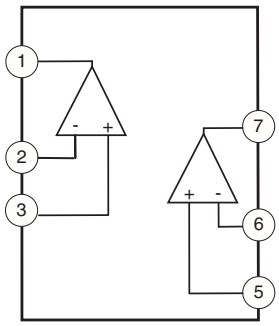

A BOARD IC1701 STV9379

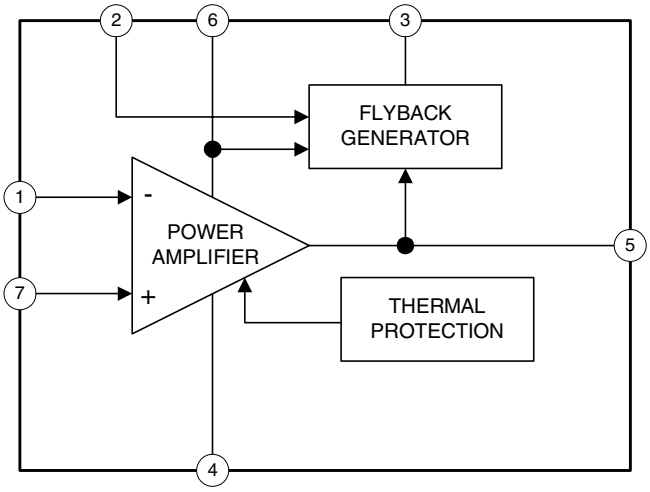

A BOARD IC1802 LM358N

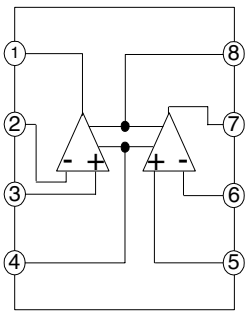

A BOARD IC1006/IC1007/IC1010 PQ1CG2032FZ

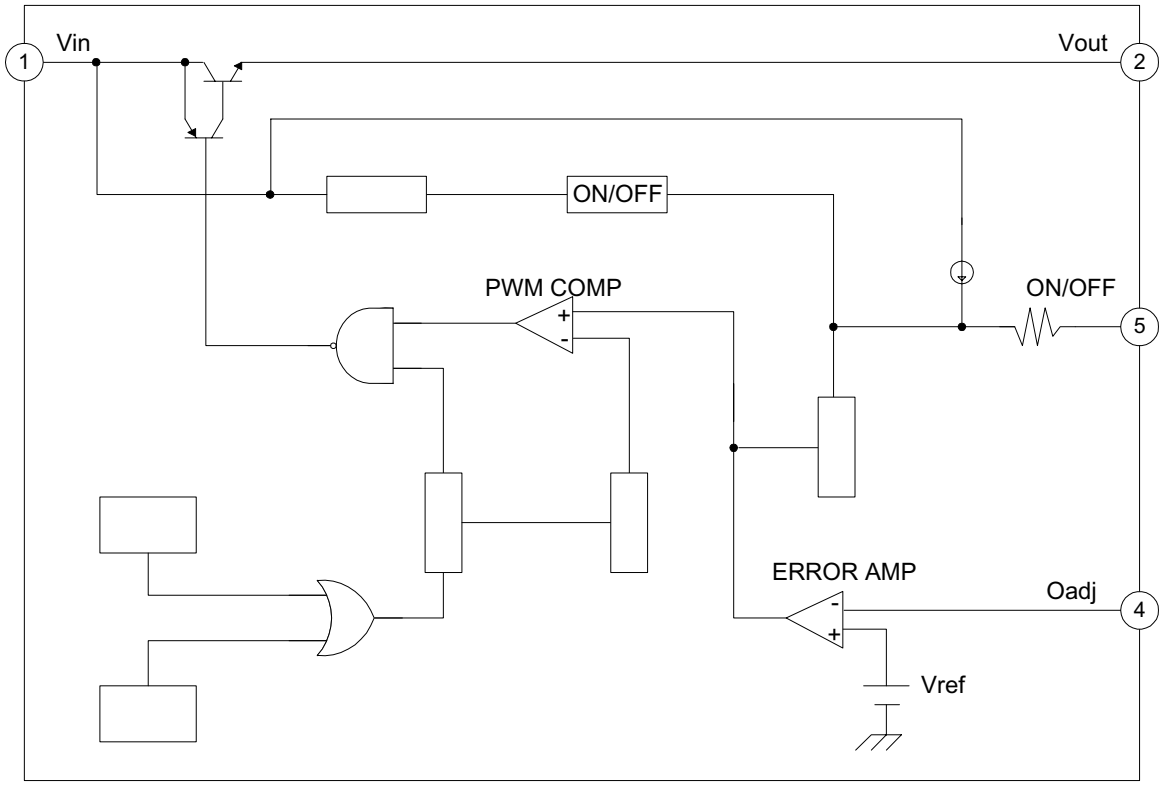

A BOARD IC1012/IC1812 BA033T/BA12T

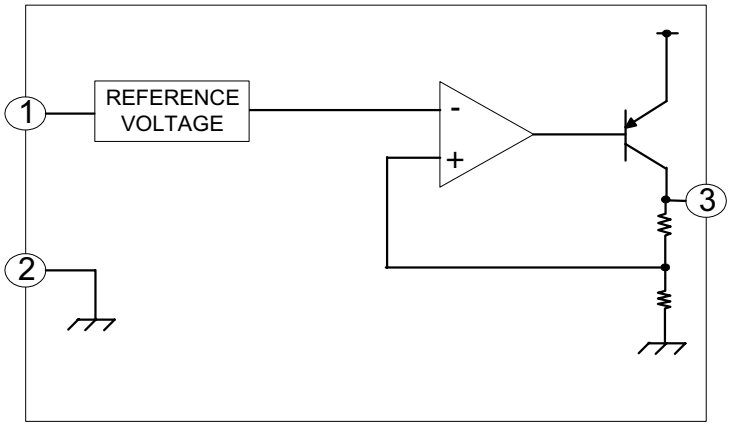

D2 BOARD IC6801/IC6802 NJM2903/NJM2904

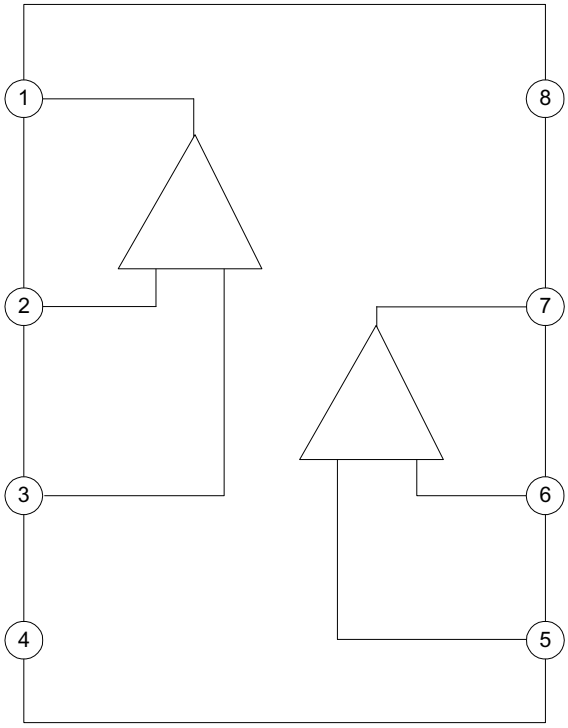

D2 BOARD IC6803/IC6807 TLV431

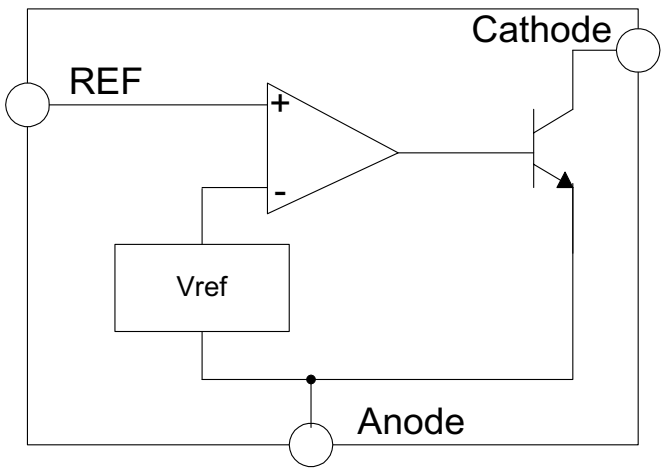

SECTION 6
EXPLODED VIEWS

Note : Les composants indentifies par une trame et par une marque ⚠ sonte d'une importance critique pour la securite. Ne les remplacer que par des pieces du numero specifie.

Note : The components identified by shading and marked ⚠ are critical for safety. Replace only with the part numbers specified in the parts list.

NOTE :

- Items with no part number and no description are not stocked because they are seldom required for routine service.
- The construction parts of an assembled part are indicated with a collation number in the remarks column.
- Items marked "*" are not stocked since they are seldom required for routine service. Some delay should be anticipated when ordering these items.

6-1. CHASSIS

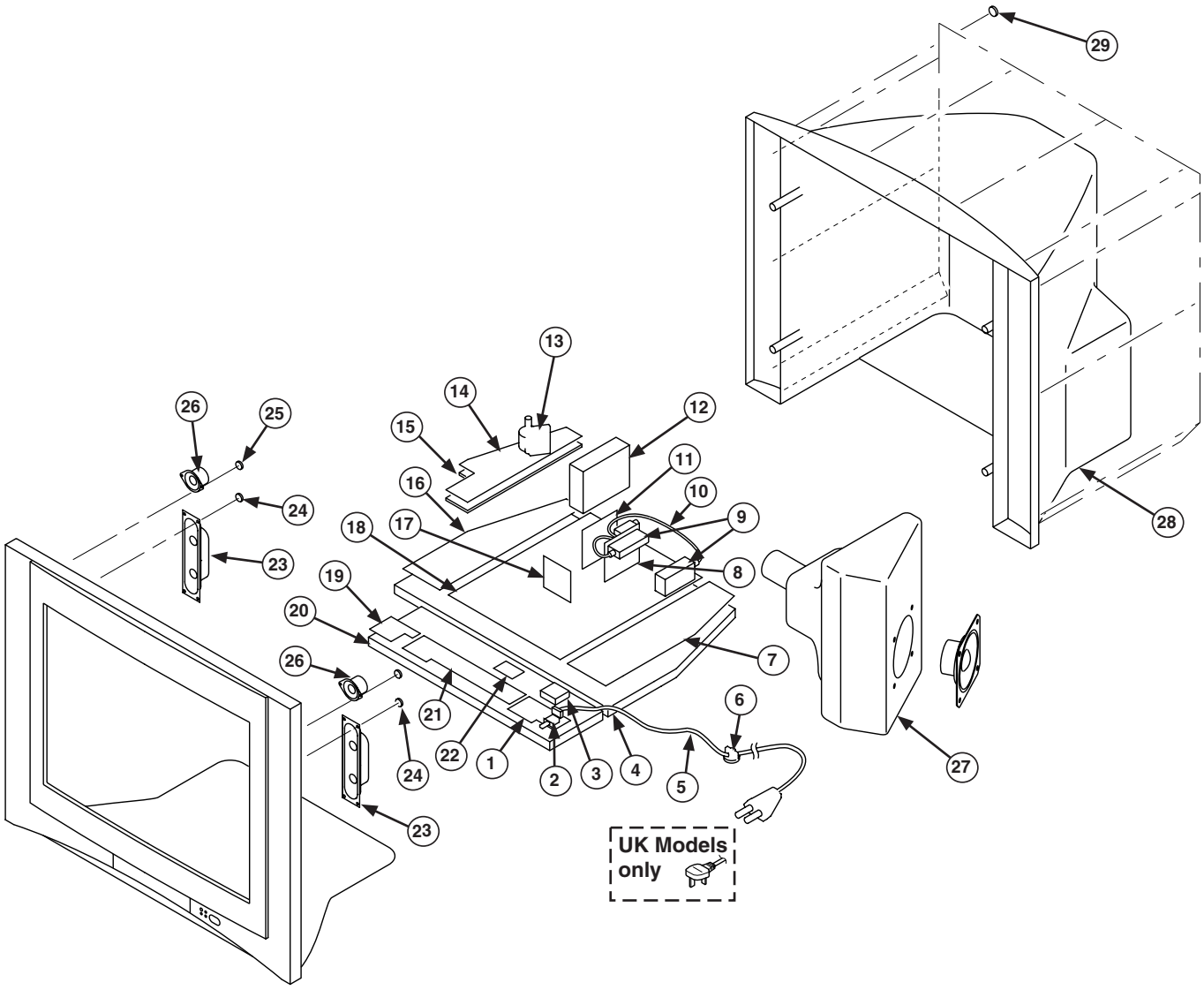

REF.NO.		PART.NO	DESCRIPTION	REMARK
1		*A-1401-339-A	F3 BOARD, COMPLETE (KV-32FQ80)	
		*A-1401-053-A	F3 BOARD, COMPLETE (KV-36FQ80)	
2	⚠	1-571-433-21	SWITCH, PUSH (AC POWER)	
3		1-424-855-11	COIL, CHOKE 29MMH	
4		*4-206-106-21	BRACKET, MAIN	
5	⚠	1-765-286-11	CORD, POWER	
6		*4-202-531-01	AC CORD LOCK (SC)	
7		*A-1300-461-A	G BOARD, COMPLETE (KV-32FQ80)	
		*A-1300-549-A	G BOARD, COMPLETE (KV-36FQ80)	
8		*A-1300-651-A	J2 BOARD, COMPLETE (KV-32FQ80B)	
		*A-1300-632-A	J2 BOARD, COMPLETE (KV-32FQ80E/32FQ80K)	
		*A-1300-676-A	J2 BOARD, COMPLETE (KV-32FQ80U)	
		*A-1300-651-A	J2 BOARD, COMPLETE (KV-36FQ80B)	
		*A-1300-632-A	J2 BOARD, COMPLETE (KV-36FQ80E/36FQ80K)	

REF.NO.		PART.NO	DESCRIPTION	REMARK
9		8-598-536-20	FRONTEND BTF-EF412	(KV-32FQ80B)
		8-598-534-10	FRONTEND BTF-EC412	(KV-32FQ80E/32FQ80K/ KV-36FQ80E/36FQ80K)
		8-598-530-10	FRONTEND BTF-EU612	(KV-32FQ80U)
		8-598-536-20	FRONTEND BTF-EF412	(KV-36FQ80B)
10		*1-824-464-11	PP CABLE	
11		*A-1300-548-A	B5 BOARD, COMPLETE	
12		X-4200-759-3	SHIELD N ASSY	
13	⚠	1-453-444-21	TRANSFORMER ASSY, FLYBACK (NX-6020//Z2B4)	
14		*A-1300-282-A	D2 BOARD, COMPLETE (KV-32FQ80)	
		*A-1300-284-A	D2 BOARD, COMPLETE (KV-36FQ80)	
15		*4-087-469-01	BRACKET, D2	
16		*A-1300-281-A	D1 BOARD, COMPLETE (KV-32FQ80)	
		*A-1300-285-A	D1 BOARD, COMPLETE (KV-36FQ80)	

REF.NO.	PART.NO	DESCRIPTION	REMARK
17	*A-1400-438-A	M2 BOARD, COMPLETE	
18	*A-1400-473-A	A BOARD, COMPLETE (KV-32FQ80B)	
	*A-1401-340-A	A BOARD, COMPLETE (KV-32FQ80E/32FQ80K)	
	*A-1401-344-A	A BOARD, COMPLETE (KV-32FQ80U)	
	*A-1400-478-A	A BOARD, COMPLETE (KV-36FQ80B)	
	*A-1401-268-A	A BOARD, COMPLETE (KV-36FQ80E/36FQ80K)	
19	*A-1304-241-A	MS2 BOARD, COMPLETE	
20	*4-087-550-01	BRACKET, H	
21	*A-1400-475-A	H3 BOARD, COMPLETE	
22	*A-1401-265-A	H BOARD, COMPLETE	
23	1-825-177-11	LOUDSPEAKER (4.2X24CM)	
24	7-685-663-71	SCREW, +BVTP 4X16 TYPE 2 IT-3	
25	4-058-870-01	SCREW, (4X16) W (+) P TAPPING	
26	1-542-437-11	SPEAKER (2CM)	
27	*A-1601-904-A	WOOFER ASSY	
28	X-4039-982-1	REAR COVER ASSY (KV-32FQ80)	
	4-087-538-01	REAR COVER (KV-36FQ80)	
29	4-058-870-01	SCREW, (4X16) W(+) P TAPPING	

6-2. PICTURE TUBE

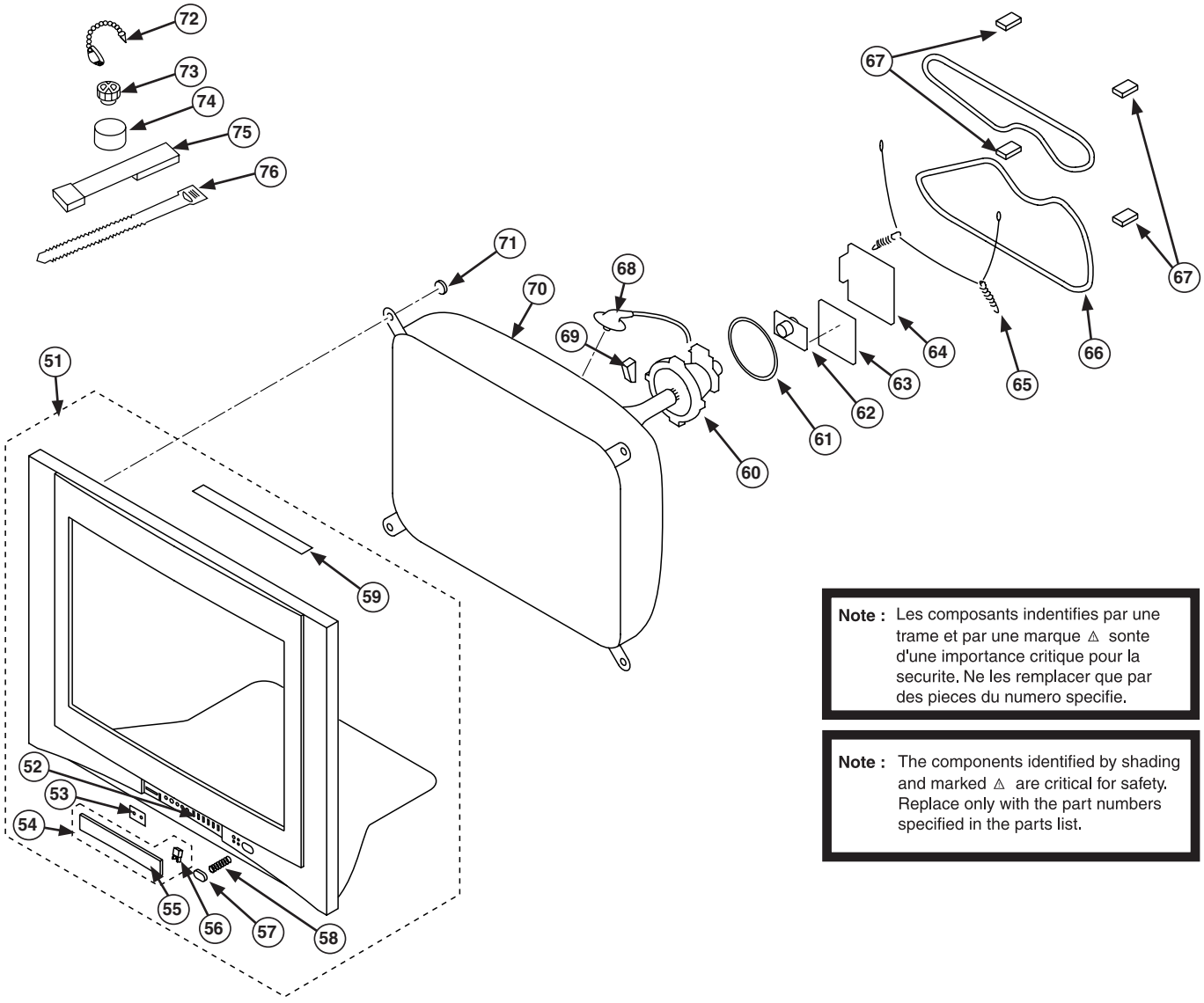

Note : Les composants indentifies par une trame et par une marque ⚠ sonte d'une importance critique pour la securite. Ne les remplacer que par des pieces du numero specifie.

Note : The components identified by shading and marked ⚠ are critical for safety. Replace only with the part numbers specified in the parts list.

REF.NO.		PART.NO	DESCRIPTION	REMARK
51		*X-4039-980-1	BEZEL ASSY (KV-32FQ80)	52-59
		*X-4039-965-1	BEZEL ASSY (KV-36FQ80)	52-59
52		*4-087-533-01	MULTIBUTTON	
53		4-087-530-01	GUIDE LIGHT	
54		X-4039-967-1	DOOR ASSY	55,56
55		4-207-552-01	DOOR	
56		4-083-848-02	DAMPER, DOOR	
57		*4-087-527-01	POWER BUTTON	
58		4-204-426-01	SPRING	
59		4-203-128-21	SHEET, BLOTTING	
60	⚠	8-451-480-11	DEFLECTION YOKE (Y32RVC2) (KV-32FQ80)	
	⚠	8-451-507-32	DEFLECTION YOKE (Y36RVC2-M3) (KV-36FQ80)	
61		1-452-896-11	COIL, NA ROTATION (RT200)	
62	⚠	8-453-011-11	NECK ASSY, (NA299-M) (KV-32FQ80)	
	⚠	8-453-007-31	NECK ASSY, (NA324-M3) (KV-36FQ80)	
63		*A-1401-267-A	VM BOARD, COMPLETE	

REF.NO.		PART.NO	DESCRIPTION	REMARK
64		*A-1401-264-A	C1 BOARD, COMPLETE	
65		4-369-318-21	SPRING, TENSION (KV-32FQ80)	
		4-089-228-01	SPRING EXTENSION (KV-36FQ80)	
66	⚠	1-424-888-11	COIL, DEGAUSSING (KV-32FQ80)	
	⚠	1-428-963-11	DEGAUSSING COIL (KV-36FQ80)	
67		4-203-390-11	CUSHION, DGC	
68	⚠	1-251-946-11	CAP ASSY, HIGH-VOLTAGE	
69		3-704-495-01	SPACER, DY	
70	⚠	8-735-079-05	PICTURE TUBE (W76LLZ060X) (KV-32FQ80)	
	⚠	8-735-061-05	PICTURE TUBE (W86LPH010X) (KV-36FQ80)	
71		4-080-811-01	SCREW, TAPPING 7+CROWN WASHER (L40)	
72		4-308-870-00	CLIP, LEAD WIRE	
73		1-452-094-00	MAGNET, ROTATABLE DISK; 15MM	
74		4-425-032-00	MAGNET, DISK; 10MM	
75		X-4387-214-1	PERMALLOY ASSY, CORRECTION	
76		3-701-007-00	BAND, BINDING	

SECTION 7
ELECTRICAL PARTS LIST

PARTS LISTING TABLE OF CONTENTS

		Page
D2 BOARD COMMON Parts List :	Parts common to all models listed in this manual	75
D2 BOARD VARIANT Parts List :	Parts that belong only to the model specified	
Model		
KV-32FQ80	.....	77
KV-36FQ80	.....	77
D1 BOARD COMMON Parts List :	Parts common to all models listed in this manual	77
D1 BOARD VARIANT Parts List :	Parts that belong only to the model specified	
Model		
KV-32FQ80	.....	79
KV-36FQ80	.....	80
B5 BOARD COMPLETE Parts List :	.....	81
G BOARD COMMON Parts List :	Parts common to all models listed in this manual	88
G BOARD VARIANT Parts List :	Parts that belong only to the model specified	
Model		
KV-32FQ80	.....	90
KV-36FQ80	.....	90
J2 BOARD COMMON Parts List :	Parts common to all models listed in this manual	91
J2 BOARD VARIANT Parts List :	Parts that belong only to the model specified	
Model		
KV-32FQ80B/36FQ80B	.....	96
KV-32FQ80E/32FQ80K/ KV-36FQ80E/36FQ80K	.....	96
KV-32FQ80U	.....	96
MS2 BOARD COMPLETE Parts List :	.....	96
M2 BOARD COMPLETE Parts List :	.....	97
H3 BOARD COMPLETE Parts List :	.....	99
A BOARD COMMON Parts List :	Parts common to all models listed in this manual	100
A BOARD VARIANT Parts List :	Parts that belong only to the model specified	
Model		
KV-32FQ80	.....	107
KV-36FQ80	.....	108
C1 BOARD COMPLETE Parts List :	.....	109
H BOARD COMPLETE Parts List :	.....	111
F3 BOARD COMMON Parts List :	Parts common to all models listed in this manual	112
F3 BOARD VARIANT Parts List :	Parts that belong only to the model specified	
Model		
KV-32FQ80	.....	112
KV-36FQ80	.....	112
VM BOARD COMPLETE Parts List :	.....	112
MISCELLANEOUS :	.....	114
ACCESSORIES AND PACKAGING MATERIALS :	.....	114

Note : The N Board and MS1 Board Schematic Diagrams, Printed Wiring Boards and Parts List are not indicated in this manual as the PWB's are regarded as a non service item for exchange only.

Note : Refer to the designated variant parts list when seeking a part indicated by an asterisk (*)
Parts indicated (XX) on the Schematic Diagram are not used in this model and therefore do not appear in the Parts List.

REF.NO.	PART.NO	DESCRIPTION			REMARK
***A-1300-282-A**	**D2 Board, Complete (KV-32FQ80)**				
***A-1300-284-A**	**D2 Board, Complete (KV-36FQ80)**				
	3-710-578-01	COVER, VOLUME, 6 MOLD			
	4-382-854-01	SCREW (M3X8), P, SW (+)			
D2 Board Common Parts					
		< CAPACITOR >			
C6802	1-130-483-00	MYLAR	0.01UF	5.00%	50V
C6803	1-165-176-11	CERAMIC CHIP	0.047UF	10.00%	16V
C6804	1-136-813-11	FILM	680PF	5.00%	100V
C6805	1-126-964-11	ELECT	10UF	20.00%	50V
C6806	1-128-551-11	ELECT	22UF	20.00%	63V
C6807	1-130-495-00	MYLAR	0.1UF	5.00%	50V
C6808	1-126-947-11	ELECT	47UF	20.00%	35V
C6809	1-162-966-11	CERAMIC CHIP	0.0022UF	10.00%	50V
C6810	1-162-115-00	CERAMIC	330PF	10.00%	1KV
C6811	1-162-115-00	CERAMIC	330PF	10.00%	1KV
C6812	1-135-946-81	FILM	47000PF	3%	800V
C6813	1-126-967-11	ELECT	47UF	20.00%	50V
C6814	1-126-947-11	ELECT	47UF	20.00%	35V
C6815	1-130-483-00	MYLAR	0.01UF	5.00%	50V
C6816	1-126-964-11	ELECT	10UF	20.00%	50V
C6820	1-130-495-00	MYLAR	0.1UF	5.00%	50V
C6821	1-126-964-11	ELECT	10UF	20.00%	50V
C6822	1-126-966-11	ELECT	33UF	20.00%	50V
C6823	1-126-933-11	ELECT	100UF	20.00%	16V
C6824	1-113-610-11	ELECT(BLOCK)	220UF	20.00%	250V
C6825	1-130-495-00	MYLAR	0.1UF	5.00%	50V
C6826	1-126-969-11	ELECT	220UF	20.00%	50V
C6827	1-162-970-11	CERAMIC CHIP	0.01UF	10.00%	25V
C6834	1-162-970-11	CERAMIC CHIP	0.01UF	10.00%	25V
C6835	1-127-715-91	CERAMIC CHIP	0.22UF	10%	16V
C6836	1-136-165-00	FILM	0.1UF	5.00%	50V
C6837	1-136-103-00	FILM	0.1UF	5.00%	200V
C6840	1-130-495-00	MYLAR	0.1UF	5.00%	50V
C6842	1-130-471-00	MYLAR	0.001UF	5.00%	50V
C6843	1-135-945-81	FILM	10000PF	3%	800V
C6848	1-126-963-11	ELECT	4.7UF	20.00%	50V
C6849	1-162-962-11	CERAMIC CHIP	470PF	10.00%	50V
C6850	1-107-826-11	CERAMIC CHIP	0.1UF	10.00%	16V
C6851	1-107-826-11	CERAMIC CHIP	0.1UF	10.00%	16V
C6852	1-162-970-11	CERAMIC CHIP	0.01UF	10.00%	25V
C6853	1-126-933-11	ELECT	100UF	20.00%	16V
C8929	1-107-960-11	ELECT	4.7UF	20.00%	250V
C8930	1-129-898-00	FILM	0.0022UF	5.00%	630V
C8932	1-136-205-11	MYLAR	0.022UF	5.00%	630V
C8938	1-162-131-11	CERAMIC	220PF	10.00%	2KV
C8939	1-162-129-00	CERAMIC	150PF	10.00%	2KV
C8944	1-137-150-11	FILM	0.01UF	5.00%	100V
C8945	1-126-947-11	ELECT	47UF	20.00%	35V
		< CONNECTOR >			
CN6800	*1-564-511-11	PLUG, CONNECTOR 8P			
CN6801	1-691-772-11	PLUG (MICRO CONNECTOR) 10P			
		< DIODE >			
D6800	8-719-052-90	DIODE D1NL40-TA2			
D6801	8-719-110-41	DIODE RD15ESB2			
D6802	8-719-110-41	DIODE RD15ESB2			
D6803	8-719-911-19	DIODE 1SS119-25			
D6804	8-719-081-97	DIODE MMDL914T1			
D6806	8-719-109-85	DIODE RD5.1ESB2			
D6811	8-719-911-19	DIODE 1SS119-25			
D6813	8-719-911-19	DIODE 1SS119-25			
D6814	8-719-982-21	DIODE MTZJ-30C			
D6815	8-719-911-19	DIODE 1SS119-25			
D6816	8-719-110-41	DIODE RD15ESB2			
D6817	8-719-063-73	DIODE D1NL20U-TR			
D6820	8-719-921-63	DIODE MTZJ-7.5B			
D6821	8-719-110-49	DIODE RD18ESB2			
D6822	8-719-063-73	DIODE D1NL20U-TR			
D6823	8-719-911-19	DIODE 1SS119-25			
D6824	8-719-911-19	DIODE 1SS119-25			
D6825	8-719-911-19	DIODE 1SS119-25			
D6828	8-719-911-19	DIODE 1SS119-25			
D8919	8-719-948-45	DIODE ERA22-08			
D8927	8-719-991-33	DIODE 1SS133T-77			
		< FERRITE BEAD >			
FB6801	1-412-911-11	FERRITE	0UH		
		< IC >			
IC6800	8-759-670-30	IC MCZ3001D			
IC6801	8-759-700-07	IC NJM2903M			
IC6802	8-759-701-01	IC NJM2904M			
IC6803	8-759-462-09	IC TLV431AIDBV			
IC6807	8-759-586-17	IC TL1431CZ-AP			
		< COIL >			
L6802	1-419-658-11	INDUCTOR	107UH		
L8901	1-406-674-11	INDUCTOR	3.3MH		
		< TRANSISTOR >			
Q6801	8-729-901-81	TRANSISTOR 2SC2412K-T-146-R			
Q6802	8-729-901-81	TRANSISTOR 2SC2412K-T-146-R			
Q6803	8-729-120-28	TRANSISTOR 2SC1623-L5L6			
Q6804	8-729-044-42	TRANSISTOR IRFI644G-LF36			

Note : The components identified by shading and marked ⚠ are critical for safety. Replace only with the part numbers specified in the parts list.

D2

REF.NO.	PART.NO	DESCRIPTION			REMARK
Q6805	8-729-044-42	TRANSISTOR IRFI644G-LF36			
Q6807	8-729-120-28	TRANSISTOR 2SC1623-L5L6			
Q6808	8-729-120-28	TRANSISTOR 2SC1623-L5L6			
Q6813	8-729-424-02	TRANSISTOR 2SB709A-QRS-TX			
Q6814	8-729-900-53	TRANSISTOR DTC114EK			
Q6815	8-729-424-02	TRANSISTOR 2SB709A-QRS-TX			
Q6816	8-729-900-53	TRANSISTOR DTC114EK			
Q6817	8-729-424-02	TRANSISTOR 2SB709A-QRS-TX			
Q8909	6-550-012-01	TRANSISTOR STP5NB40(033Y)			
Q8918	1-801-806-11	TR DTC144EKA			
		< RESISTOR >			
R6801	1-216-841-11	RES-CHIP	47K	5%	1/10W
R6802	1-216-849-11	RES-CHIP	220K	5%	1/10W
R6803	1-216-829-11	RES-CHIP	4.7K	5%	1/10W
R6805	1-215-481-00	METAL	330K	1%	1/4W
R6806	1-215-481-00	METAL	330K	1%	1/4W
R6807	1-215-481-00	METAL	330K	1%	1/4W
R6808	1-211-981-11	METAL CHIP	33	0.5%	1/10W
R6809	1-218-823-11	METAL CHIP	100	0.5%	1/10W
R6810	1-249-417-11	CARBON	1K	5%	1/4W
R6811	1-202-933-61	FUSIBLE	0.1	10%	1/2W
R6812	1-218-869-11	METAL CHIP	8.2K	0.5%	1/10W
R6813	1-249-393-11	CARBON	10	5%	1/4W
R6814	1-249-393-11	CARBON	10	5%	1/4W
R6815	1-216-833-11	RES-CHIP	10K	5%	1/10W
R6816	1-216-833-11	RES-CHIP	10K	5%	1/10W
R6817	1-243-979-71	METAL OXIDE	0.1	5%	2W
R6818	1-249-389-11	CARBON	4.7	5%	1/4W
R6820	1-216-837-11	RES-CHIP	22K	5%	1/10W
R6821	1-216-837-11	RES-CHIP	22K	5%	1/10W
R6823	1-247-843-11	CARBON	3.3K	5%	1/4W
R6828	1-218-895-11	METAL CHIP	100K	0.5%	1/10W
R6829	1-216-841-11	RES-CHIP	47K	5%	1/10W
R6832	1-216-841-11	RES-CHIP	47K	5%	1/10W
R6834	1-216-841-11	RES-CHIP	47K	5%	1/10W
R6835	1-215-423-00	METAL	1.2K	1%	1/4W
R6836	1-215-441-00	METAL	6.8K	1%	1/4W
R6839	1-215-439-00	METAL	5.6K	1%	1/4W
R6843	1-218-845-11	METAL CHIP	820	0.5%	1/10W
R6844	1-218-875-11	METAL CHIP	15K	0.5%	1/10W
R6845	1-218-855-11	METAL CHIP	2.2K	0.5%	1/10W
R6846	1-218-868-11	METAL CHIP	7.5K	0.5%	1/10W
R6847	1-218-847-11	METAL CHIP	1K	0.5%	1/10W
R6848	1-216-817-11	RES-CHIP	470	5%	1/10W
R6865	1-216-835-11	RES-CHIP	15K	5%	1/10W
R6867	1-216-809-11	RES-CHIP	100	5%	1/10W
R6868	1-216-797-11	RES-CHIP	10	5%	1/10W
R6869	1-216-833-11	RES-CHIP	10K	5%	1/10W
R6870	1-216-849-11	RES-CHIP	220K	5%	1/10W
R6872	1-249-377-11	CARBON	0.47	5%	1/4W
R6873	1-249-431-11	CARBON	15K	5%	1/4W
R6874	1-218-903-11	METAL CHIP	220K	0.5%	1/10W
R6875	1-216-863-11	RES-CHIP	3.3M	5%	1/10W
R6876	1-215-485-00	METAL	470K	1%	1/4W
R6877	1-215-485-00	METAL	470K	1%	1/4W
R6878	1-216-821-11	RES-CHIP	1K	5%	1/10W
R6880	1-219-751-51	CARBON	47K	5%	1/2W
R6881	1-219-749-51	CARBON	10K	5%	1/2W
R6882	1-216-841-11	RES-CHIP	47K	5%	1/10W
R6883	1-211-985-11	METAL CHIP	47	0.5%	1/10W
R6884	1-218-874-11	METAL CHIP	13K	0.5%	1/10W
R6885	1-216-841-11	RES-CHIP	47K	5%	1/10W
R6887	1-249-411-11	CARBON	330	5%	1/4W
R6895	1-216-809-11	RES-CHIP	100	5%	1/10W
R6896	1-216-839-11	RES-CHIP	33K	5%	1/10W
R6897	1-216-853-11	RES-CHIP	470K	5%	1/10W
R6899	1-216-839-11	RES-CHIP	33K	5%	1/10W
R8949	1-215-922-11	METAL OXIDE	6.8K	5%	3W
R8950	1-215-922-11	METAL OXIDE	6.8K	5%	3W
R8951	1-215-922-11	METAL OXIDE	6.8K	5%	3W
R8952	1-215-922-11	METAL OXIDE	6.8K	5%	3W
R8954	1-260-123-11	CARBON	100K	5%	1/2W
R8955	1-260-123-11	CARBON	100K	5%	1/2W
R8956	1-260-123-11	CARBON	100K	5%	1/2W
R8957	1-218-847-11	METAL CHIP	1K	0.5%	1/10W
R8988	1-260-123-11	CARBON	100K	5%	1/2W
R8989	1-249-429-11	CARBON	10K	5%	1/4W
R8990	1-216-845-11	RES-CHIP	100K	5%	1/10W
R8991	1-216-837-11	RES-CHIP	22K	5%	1/10W
R8998	1-215-922-11	METAL OXIDE	6.8K	5%	3W
		< RESISTOR VARIABLE >			
RV6800	1-241-763-11	RES, ADJ, CERMET 4.7K			
		< SPARK GAP >			
SG6800	1-517-499-21	GAP, SPARK			
		< TRANSFORMER >			
T6800 ⚠	1-453-444-21	TRANSFORMER ASSY, FLYBACK (NX-6020//Z2B4)			
T8901	1-437-690-11	TRANSFORMER, FERRITE (DFT)			

D2 Board Variant Parts KV-32FQ80

< CAPACITOR >

REF.NO.	PART.NO	DESCRIPTION			REMARK
C8952	1-102-030-00	CERAMIC	330PF	10.00%	500

< RESISTOR >

REF.NO.	PART.NO	DESCRIPTION			REMARK
R6825	1-218-912-11	METAL CHIP	510K	0.5%	1/10W
R6827	1-218-883-91	RES CHIP	33K	0.5%	1/10W
R6837	1-215-439-00	METAL	5.6K	1%	1/4W
R6838	1-215-439-00	METAL	5.6K	1%	1/4W
R6840	1-215-439-00	METAL	5.6K	1%	1/4W
R6841	1-218-847-11	METAL CHIP	1K	0.5%	1/10W

D2 Board Variant Parts KV-36FQ80

< CAPACITOR >

C8952 NOT FITTED

< RESISTOR >

REF.NO.	PART.NO	DESCRIPTION			REMARK
R6825	1-218-899-11	METAL CHIP	150K	0.5%	1/16W
R6827	1-218-877-11	METAL CHIP	47K	0.5%	1/10W
R6837	1-215-441-00	METAL	6.8K	1%	1/4W
R6838	1-215-437-00	METAL	4.7K	1%	1/4W
R6840	1-215-445-00	METAL	10K	1%	1/4W
R6841	1-218-841-11	METAL CHIP	560	0.5%	1/10W

*A-1300-281-A D1 Board, Complete (KV-32FQ80)
*A-1300-285-A D1 Board, Complete (KV-36FQ80)

*3-646-071-02	HOLDER, WIRE
4-382-854-01	SCREW (M3X8), P, SW (+)

D1 Board Common Parts

< CAPACITOR >

REF.NO.	PART.NO	DESCRIPTION			REMARK
C8100	1-126-960-11	ELECT	1UF	20.00%	50V
C8101	1-162-962-11	CERAMIC CHIP	470PF	10.00%	50V
C8102	1-102-030-00	CERAMIC	330PF	10.00%	500V
C8104	1-106-383-00	MYLAR	0.047UF	10.00%	200V
C8105	1-126-960-11	ELECT	1UF	20.00%	50V
C8106	1-162-962-11	CERAMIC CHIP	470PF	10.00%	50V
C8107	1-102-030-00	CERAMIC	330PF	10.00%	500V
C8109	1-106-383-00	MYLAR	0.047UF	10.00%	200V
C8111	1-162-134-11	CERAMIC	470PF	10.00%	2KV
C8114	1-125-893-11	FILM	680PF	3.00%	1.5KV
C8115	1-125-893-11	FILM	680PF	3.00%	1.5KV
C8116	1-127-681-11	FILM	10000PF	2%	100V
C8118	1-107-846-11	FILM	0.1UF	5.00%	400V
C8121	1-107-846-11	FILM	0.1UF	5.00%	400V
C8200	1-123-024-21	ELECT	33UF		160V
C8201	1-107-656-11	ELECT	100UF	20.00%	250V
C8202	1-102-228-00	CERAMIC	470PF	10.00%	500V
C8203	1-102-228-00	CERAMIC	470PF	10.00%	500V
C8204	1-102-228-00	CERAMIC	470PF	10.00%	500V
C8205	1-126-941-11	ELECT	470UF	20.00%	25V
C8206	1-126-941-11	ELECT	470UF	20.00%	25V
C8304	1-104-666-11	ELECT	220UF	20.00%	25V
C8305	1-164-156-11	CERAMIC CHIP	0.1UF		25V
C8314	1-162-927-11	CERAMIC CHIP	100PF	5.00%	50V
C8501	1-162-964-11	CERAMIC CHIP	0.001UF	10.00%	50V
C8502	1-162-970-11	CERAMIC CHIP	0.01UF	10.00%	25V
C8503	1-162-970-11	CERAMIC CHIP	0.01UF	10.00%	25V
C8506	1-126-947-11	ELECT	47UF	20.00%	35V
C8802	1-164-315-11	CERAMIC CHIP	470PF	5.00%	50V
C8803	1-164-315-11	CERAMIC CHIP	470PF	5.00%	50V
C8804	1-115-416-11	CERAMIC CHIP	0.001UF	5.00%	25V
C8809	1-162-970-11	CERAMIC CHIP	0.01UF	10.00%	25V
C8810	1-126-947-11	ELECT	47UF	20.00%	35V
C8811	1-162-970-11	CERAMIC CHIP	0.01UF	10.00%	25V
C8812	1-126-960-11	ELECT	1UF	20.00%	50V
C8817	1-162-970-11	CERAMIC CHIP	0.01UF	10.00%	25V
C8820	1-164-227-11	CERAMIC CHIP	0.022UF	10.00%	25V
C8821	1-162-970-11	CERAMIC CHIP	0.01UF	10.00%	25V
C8822	1-136-479-11	FILM	0.001UF	5.00%	100V
C8823	1-162-964-11	CERAMIC CHIP	0.001UF	5.00%	50V
C8824	1-162-964-11	CERAMIC CHIP	0.001UF	10.00%	50V
C8825	1-126-960-11	ELECT	1UF	20.00%	50V

< CONNECTOR >

CN8601	*1-564-506-11	PLUG, CONNECTOR 3P
CN8611	*1-785-270-12	PIN, DY CONNECTOR (PC BOARD)
CN8612	*1-564-511-11	PLUG, CONNECTOR 8P
CN8614	*1-564-508-11	PLUG, CONNECTOR 5P
CN8615	*1-564-509-11	PLUG, CONNECTOR 6P
CN8616	*1-564-510-11	PLUG, CONNECTOR 7P

< DIODE >

D8100	8-719-991-33	DIODE 1SS133T-77
D8101	8-719-110-41	DIODE RD15ESB2
D8102	8-719-110-41	DIODE RD15ESB2
D8201	8-719-302-43	DIODE EL1Z
D8202	8-719-302-43	DIODE EL1Z
D8203	8-719-510-73	DIODE S3L20UF4
D8204	8-719-510-73	DIODE S3L20UF4
D8309	8-719-988-61	DIODE 1SS355TE-17
D8311	8-719-988-61	DIODE 1SS355TE-17
D8312	8-719-988-61	DIODE 1SS355TE-17
D8313	8-719-988-61	DIODE 1SS355TE-17
D8802	8-719-988-61	DIODE 1SS355TE-17

REF.NO.	PART.NO	DESCRIPTION			REMARK
D8804	8-719-988-61	DIODE 1SS355TE-17			
D8805	8-719-988-61	DIODE 1SS355TE-17			
		< IC >			
IC8501	8-759-998-98	IC LM358D			
IC8801	6-701-847-01	IC UPC1898CT-A			
		< COIL >			
L8201	1-535-303-00	LEAD, JUMPER (5.0MM)			
L8202	1-535-143-61	LEAD, JUMPER (5.0MM)			
L8203	1-535-143-61	LEAD, JUMPER (5.0MM)			
		< TRANSISTOR >			
Q8010	8-729-901-81	TRANSISTOR 2SC2412K-T-146-R			
Q8011	8-729-026-49	TRANSISTOR 2SA1037AK-T146-R			
Q8014	8-729-901-81	TRANSISTOR 2SC2412K-T-146-R			
Q8015	8-729-026-49	TRANSISTOR 2SA1037AK-T146-R			
Q8100	8-729-048-47	TRANSISTOR 2SC2688(5)-LK			
Q8101	8-729-048-47	TRANSISTOR 2SC2688(5)-LK			
Q8103	8-729-056-17	TRANSISTOR 2SC5696-SONY-CA			
Q8308	8-729-026-49	TRANSISTOR 2SA1037AK-T146-R			
Q8501	8-729-026-49	TRANSISTOR 2SA1037AK-T146-R			
Q8502	8-729-901-81	TRANSISTOR 2SC2412K-T-146-R			
Q8503	8-729-901-81	TRANSISTOR 2SC2412K-T-146-R			
Q8504	8-729-026-49	TRANSISTOR 2SA1037AK-T146-R			
Q8507	8-729-901-81	TRANSISTOR 2SC2412K-T-146-R			
Q8508	8-729-026-49	TRANSISTOR 2SA1037AK-T146-R			
Q8701	8-729-901-81	TRANSISTOR 2SC2412K-T-146-R			
Q8801	8-729-026-49	TRANSISTOR 2SA1037AK-T146-R			
Q8802	8-729-901-81	TRANSISTOR 2SC2412K-T-146-R			
Q8806	8-729-901-81	TRANSISTOR 2SC2412K-T-146-R			
Q8807	8-729-026-49	TRANSISTOR 2SA1037AK-T146-R			
Q8808	1-801-806-11	TR DTC144EKA			
Q8809	8-729-901-81	TRANSISTOR 2SC2412K-T-146-R			
Q8810	8-729-901-81	TRANSISTOR 2SC2412K-T-146-R			
		< RESISTOR >			
R8028	1-249-411-11	CARBON	330	5%	1/4W
R8033	1-249-411-11	CARBON	330	5%	1/4W
R8101	1-215-895-11	METAL OXIDE	3.3K	5%	2W
R8102	1-249-419-11	CARBON	1.5K	5%	1/4W
R8103	1-260-340-11	CARBON	10K	5%	1/2W
R8107	1-249-419-11	CARBON	1.5K	5%	1/4W
R8108	1-260-340-11	CARBON	10K	5%	1/2W
R8110	1-215-880-00	METAL OXIDE	10	5%	2W
R8111	1-216-361-21	METAL OXIDE	0.22	5%	2W
R8112	1-215-880-00	METAL OXIDE	10	5%	2W
R8115	1-215-493-00	METAL	1M	1%	1/4W
R8116	1-215-485-00	METAL	470K	1%	1/4W

REF.NO.	PART.NO	DESCRIPTION			REMARK
R8117	1-215-493-00	METAL	1M	1%	1/4W
R8119	1-247-807-31	CARBON	100	5%	1/4W
R8120	1-249-425-11	CARBON	4.7K	5%	1/4W
R8121	1-249-425-11	CARBON	4.7K	5%	1/4W
R8201	1-260-123-11	CARBON	100K	5%	1/2W
R8202	1-212-934-00	FUSIBLE	1	5%	1/2W
R8206	1-260-288-11	CARBON	0.47	5%	1/2W
R8207	1-260-288-11	CARBON	0.47	5%	1/2W
R8308	1-216-841-11	RES-CHIP	47K	5%	1/10W
R8309	1-216-841-11	RES-CHIP	47K	5%	1/10W
R8317	1-215-473-00	METAL	150K	1%	1/4W
R8318	1-215-461-00	METAL	47K	1%	1/4W
R8319	1-218-871-11	METAL CHIP	10K	0.5%	1/10W
R8320	1-216-833-11	RES-CHIP	10K	5%	1/10W
R8321	1-216-825-11	RES-CHIP	2.2K	5%	1/10W
R8327	1-218-883-11	METAL CHIP	33K	0.5%	1/10W
R8331	1-218-871-11	METAL CHIP	10K	0.5%	1/10W
R8332	1-216-833-11	RES-CHIP	10K	5%	1/10W
R8333	1-216-845-11	RES-CHIP	100K	5%	1/10W
R8334	1-216-825-11	RES-CHIP	2.2K	5%	1/10W
R8336	1-215-469-00	METAL	100K	1%	1/4W
R8363	1-218-863-11	METAL CHIP	4.7K	0.5%	1/10W
R8364	1-218-861-11	METAL CHIP	3.9K	0.5%	1/10W
R8501	1-218-895-11	METAL CHIP	100K	0.5%	1/10W
R8503	1-216-829-11	RES-CHIP	4.7K	5%	1/10W
R8504	1-216-829-11	RES-CHIP	4.7K	5%	1/10W
R8505	1-216-833-11	RES-CHIP	10K	5%	1/10W
R8506	1-216-845-11	RES-CHIP	100K	5%	1/10W
R8508	1-216-864-11	SHORT CHIP	0		
R8509	1-216-864-11	SHORT CHIP	0		
R8510	1-216-821-11	RES-CHIP	1K	5%	1/10W
R8512	1-216-845-11	RES-CHIP	100K	5%	1/10W
R8513	1-216-821-11	RES-CHIP	1K	5%	1/10W
R8517	1-216-821-11	RES-CHIP	1K	5%	1/10W
R8518	1-218-895-11	METAL CHIP	100K	0.5%	1/10W
R8701	1-215-469-00	METAL	100K	1%	1/4W
R8702	1-216-833-11	RES-CHIP	10K	5%	1/10W
R8703	1-216-825-11	RES-CHIP	2.2K	5%	1/10W
R8802	1-216-864-11	SHORT CHIP	0		
R8803	1-218-887-11	METAL CHIP	47K	0.5%	1/10W
R8804	1-216-829-11	RES-CHIP	4.7K	5%	1/10W
R8805	1-216-833-11	RES-CHIP	10K	5%	1/10W
R8810	1-216-845-11	RES-CHIP	100K	5%	1/10W
R8811	1-216-845-11	RES-CHIP	100K	5%	1/10W
R8812	1-216-864-11	SHORT CHIP	0		
R8822	1-216-845-11	RES-CHIP	100K	5%	1/10W
R8824	1-216-829-11	RES-CHIP	4.7K	5%	1/10W
R8829	1-216-809-11	RES-CHIP	100	5%	1/10W
R8831	1-216-829-11	RES-CHIP	4.7K	5%	1/10W
R8832	1-218-871-11	METAL CHIP	10K	0.5%	1/10W

REF.NO.	PART.NO	DESCRIPTION			REMARK
R8833	1-218-879-11	METAL CHIP	22K	0.5%	1/10W
R8834	1-215-469-00	METAL	100K	1%	1/4W
R8835	1-216-833-11	RES-CHIP	10K	5%	1/10W
R8836	1-216-833-11	RES-CHIP	10K	5%	1/10W
R8837	1-216-837-11	RES-CHIP	22K	5%	1/10W
R8842	1-218-869-11	METAL CHIP	8.2K	0.5%	1/10W
R8843	1-216-815-11	RES-CHIP	330	5%	1/10W
R8844	1-215-469-00	METAL	100K	1%	1/4W
R8845	1-215-469-00	METAL	100K	1%	1/4W
R8848	1-216-845-11	RES-CHIP	100K	5%	1/10W
R8849	1-216-845-11	RES-CHIP	100K	5%	1/10W
R8851	1-216-833-11	RES-CHIP	10K	5%	1/10W
R8853	1-216-857-11	RES-CHIP	1M	5%	1/10W
R8854	1-216-837-11	RES-CHIP	22K	5%	1/10W
R8855	1-216-864-11	SHORT CHIP	0		
R8856	1-216-837-11	RES-CHIP	22K	5%	1/10W
R8857	1-216-841-11	RES-CHIP	47K	5%	1/10W
R8858	1-216-845-11	RES-CHIP	100K	5%	1/10W
R8861	1-216-825-11	RES-CHIP	2.2K	5%	1/10W
R8862	1-216-833-11	RES-CHIP	10K	5%	1/10W
R8863	1-216-864-11	SHORT CHIP	0		
		< TRANSFORMER >			
T8100	1-433-489-31	TRANSFORMER, FERRITE (HDT)			
T8101	1-433-489-31	TRANSFORMER, FERRITE (HDT)			
T8202	1-437-614-11	TRANSFORMER, HORIZONTAL OUTPUT			

D1 Board Variant Parts KV-32FQ80

		< CAPACITOR >			
C8110	1-162-131-11	CERAMIC	220PF	10.00%	2KV
C8112	1-117-836-31	FILM	6800PF	3.00%	1.5
C8113	1-117-835-11	FILM	6200PF	3.00%	1.5
C8117	1-115-519-11	FILM	0.56UF	5.00%	250
C8119	1-117-662-31	FILM	0.18UF	5%	250
C8120	1-117-662-31	FILM	0.18UF	5%	250
C8208	NOT FITTED				
C8209	NOT FITTED				
C8313	1-162-964-11	CERAMIC CHIP	0.001UF	10.00%	50V
C8402	NOT FITTED				
C8403	NOT FITTED				
C8404	NOT FITTED				
C8504	1-162-966-11	CERAMIC CHIP	0.0022UF	10.00%	50V
C8607	NOT FITTED				
C8815	NOT FITTED				
		< DIODE >			
D8205	NOT FITTED				
D8206	NOT FITTED				
D8401	NOT FITTED				
D8402	NOT FITTED				
D8603	NOT FITTED				
D8604	NOT FITTED				
D8807	NOT FITTED				
		< COIL >			
L8101	1-406-985-11	INDUCTOR	2.2MH		
L8401	NOT FITTED				
		< PROTECTOR MODULE >			
PS8401	NOT FITTED				
		< TRANSISTOR >			
Q8102	8-729-056-16	TRANSISTOR 2SC5698-SONY-CA			
Q8105	8-729-050-48	TRANSISTOR IRF614-005			
Q8106	8-729-047-59	TRANSISTOR STP5NB40FP			
Q8201	NOT FITTED				
Q8401	NOT FITTED				
Q8405	NOT FITTED				
Q8406	NOT FITTED				
Q8509	NOT FITTED				
Q8510	NOT FITTED				
		< RESISTOR >			
R8227	1-535-143-31	LEAD, JUMPER (15.0MM)			
R8228	1-535-143-31	LEAD, JUMPER (15.0MM)			
R8100	1-216-460-21	METAL OXIDE	4.7K	5%	2W
R8104	1-215-920-11	METAL OXIDE	4.7K	5%	3W
R8105	1-215-920-11	METAL OXIDE	4.7K	5%	3W
R8109	NOT FITTED				
R8113	NOT FITTED				
R8114	NOT FITTED				
R8118	1-247-807-31	CARBON	100	5%	1/4W
R8213	NOT FITTED				
R8214	1-216-367-21	METAL OXIDE	0.68	5%	2W
R8215	NOT FITTED				
R8216	NOT FITTED				
R8217	NOT FITTED				
R8218	NOT FITTED				
R8219	NOT FITTED				
R8220	NOT FITTED				
R8221	NOT FITTED				
R8222	NOT FITTED				
R8223	NOT FITTED				
R8335	NOT FITTED				
R8404	NOT FITTED				
R8514	NOT FITTED				
R8515	NOT FITTED				
R8516	NOT FITTED				

Note : The components identified by shading and marked ⚠ are critical for safety. Replace only with the part numbers specified in the parts list.

REF.NO.	PART.NO	DESCRIPTION	REMARK
R8606	NOT FITTED		
R8607	NOT FITTED		
R8608	NOT FITTED		
R8609	NOT FITTED		
R8813	NOT FITTED		
R8814	NOT FITTED		
R8860	NOT FITTED		
	< TRANSFORMER >		
T8805	NOT FITTED		

D1 Board Variant Parts KV-36FQ80

	< CAPACITOR >				
C8110	1-107-444-11	CERAMIC	100PF	5.00%	2KV
C8112	1-117-843-31	FILM	13000PF	3.00%	1.5
C8113	1-117-838-31	FILM	8200PF	3.00%	1.5
C8117	1-109-844-11	FILM	0.68UF	5.00%	400
C8119	1-117-665-11	FILM	0.33UF	5.00%	250
C8120	1-117-664-11	FILM	0.27UF	5.00%	250
C8208	1-104-665-11	ELECT	100UF	20.00%	25V
C8209	1-104-665-11	ELECT	100UF	20.00%	25V
C8313	1-115-416-11	CERAMIC CHIP	0.001UF	5.00%	25V
C8402	1-130-959-91	FILM	0.047UF	5.00%	400
C8403	1-162-962-11	CERAMIC CHIP	470PF	10.00%	50V
C8404	1-136-177-00	FILM	1UF	5.00%	50V
C8504	1-162-964-11	CERAMIC CHIP	0.001UF	10.00%	50V
C8607	1-126-964-11	ELECT	10UF	20.00%	50V
C8815	1-162-970-11	CERAMIC CHIP	0.01UF	10.00%	25V
	< DIODE >				
D8205	8-719-988-61	DIODE 1SS355TE-17			
D8206	8-719-988-61	DIODE 1SS355TE-17			
D8401	8-719-110-41	DIODE RD15ESB2			
D8402	8-719-991-33	DIODE 1SS133T-77			
D8603	8-719-991-33	DIODE 1SS133T-77			
D8604	8-719-991-33	DIODE 1SS133T-77			
D8807	8-719-988-61	DIODE 1SS355TE-17			
	< COIL >				
L8101	1-419-482-11	INDUCTOR	1.5MH		
L8401	1-406-987-11	INDUCTOR	4.7MH		
	< PROTECTOR MODULE >				
PS8401 ⚠	1-532-841-21	LINK, IC	1.6A	PRF 1600	

REF.NO.	PART.NO	DESCRIPTION			
	< TRANSISTOR >				
Q8102	6-550-125-01	TRANSISTOR 2SC5698-CA			
Q8105	8-729-025-19	TRANSISTOR IRFI740G			
Q8106	8-729-025-19	TRANSISTOR IRFI740G			
Q8201	8-729-019-57	TRANSISTOR 2SA1208S-TP			
Q8401	8-729-025-19	TRANSISTOR IRFI740G			
Q8405	8-729-901-81	TRANSISTOR 2SC2412K-T-146-R			
Q8406	8-729-026-49	TRANSISTOR 2SA1037AK-T146-R			
Q8509	8-729-901-81	TRANSISTOR 2SC2412K-T-146-R			
Q8510	8-729-026-49	TRANSISTOR 2SA1037AK-T146-R			
	< RESISTOR >				
R8227	NOT FITTED				
R8228	NOT FITTED				
R8100	1-216-460-21	METAL OXIDE	3.9K	5%	2W
R8104	1-215-920-11	METAL OXIDE	3.3K	5%	3W
R8105	1-215-920-11	METAL OXIDE	3.3K	5%	3W
R8109	1-216-361-21	METAL OXIDE	0.22	5%	2W
R8113	1-216-853-11	RES-CHIP	470K	5%	1/10W
R8114	1-216-845-11	RES-CHIP	100K	5%	1/10W
R8118	1-249-401-11	CARBON	47	5%	1/4W
R8213	1-216-371-00	METAL OXIDE	1.5	5%	2W
R8214	1-216-364-21	METAL OXIDE	0.39	5%	2W
R8215	1-218-847-11	METAL CHIP	1K	0.5%	1/10W
R8216	1-215-459-00	METAL	39K	1%	1/4W
R8217	1-215-459-00	METAL	39K	1%	1/4W
R8218	1-215-469-00	METAL	100K	1%	1/4W
R8219	1-215-469-00	METAL	100K	1%	1/4W
R8220	1-216-837-11	RES-CHIP	22K	5%	1/10W
R8221	1-216-833-11	RES-CHIP	10K	5%	1/10W
R8222	1-215-469-00	METAL	100K	1%	1/4W
R8223	1-215-469-00	METAL	100K	1%	1/4W
R8335	1-218-865-11	METAL CHIP	5.6K	0.5%	1/10W
R8404	1-216-805-11	RES-CHIP	47	5%	1/10W
R8514	1-216-833-11	RES-CHIP	10K	5%	1/10W
R8515	1-216-829-11	RES-CHIP	4.7K	5%	1/10W
R8516	1-216-829-11	RES-CHIP	4.7K	5%	1/10W
R8606	1-216-837-11	RES-CHIP	22K	5%	1/10W
R8607	1-216-837-11	RES-CHIP	22K	5%	1/10W
R8608	1-216-845-11	RES-CHIP	100K	5%	1/10W
R8609	1-216-837-11	RES-CHIP	22K	5%	1/10W
R8813	1-216-864-11	SHORT CHIP	0		
R8814	1-218-879-11	METAL CHIP	22K	0.5%	1/10W
R8860	1-218-881-11	METAL CHIP	27K	0.5%	1/10W
	< TRANSFORMER >				
T8805	1-429-741-11	TRANSFORMER, DRIVE			

REF.NO.	PART.NO	DESCRIPTION	REMARK
*A-1300-548-A	B5 Board, Complete		
	4-087-203-01	PLASTIC RIVET	
	4-087-719-01	HOLDER, MS	
	*4-088-898-01	CARTON	
	4-382-854-01	SCREW (M3X8), P, SW (+)	
	*7-322-065-48	RUBBER, SILICONE RTV (KE-3490)	
	< CAPACITOR >		
C3101	1-124-779-00	ELECT CHIP 10UF	20.00% 16V
C3102	1-162-970-11	CERAMIC CHIP 0.01UF	10.00% 25V
C3104	1-126-395-11	ELECT CHIP 22UF	20.00% 16V
C3105	1-162-970-11	CERAMIC CHIP 0.01UF	10.00% 25V
C3106	1-162-970-11	CERAMIC CHIP 0.01UF	10.00% 25V
C3107	1-162-970-11	CERAMIC CHIP 0.01UF	10.00% 25V
C3108	1-162-970-11	CERAMIC CHIP 0.01UF	10.00% 25V
C3109	1-162-970-11	CERAMIC CHIP 0.01UF	10.00% 25V
C3110	1-162-970-11	CERAMIC CHIP 0.01UF	10.00% 25V
C3111	1-162-970-11	CERAMIC CHIP 0.01UF	10.00% 25V
C3112	1-124-779-00	ELECT CHIP 10UF	20.00% 16V
C3113	1-162-970-11	CERAMIC CHIP 0.01UF	10.00% 25V
C3114	1-162-970-11	CERAMIC CHIP 0.01UF	10.00% 25V
C3115	1-162-970-11	CERAMIC CHIP 0.01UF	10.00% 25V
C3116	1-162-970-11	CERAMIC CHIP 0.01UF	10.00% 25V
C3117	1-162-970-11	CERAMIC CHIP 0.01UF	10.00% 25V
C3118	1-162-970-11	CERAMIC CHIP 0.01UF	10.00% 25V
C3119	1-162-970-11	CERAMIC CHIP 0.01UF	10.00% 25V
C3120	1-162-970-11	CERAMIC CHIP 0.01UF	10.00% 25V
C3121	1-162-970-11	CERAMIC CHIP 0.01UF	10.00% 25V
C3122	1-162-970-11	CERAMIC CHIP 0.01UF	10.00% 25V
C3124	1-124-779-00	ELECT CHIP 10UF	20.00% 16V
C3125	1-162-970-11	CERAMIC CHIP 0.01UF	10.00% 25V
C3126	1-162-970-11	CERAMIC CHIP 0.01UF	10.00% 25V
C3127	1-162-970-11	CERAMIC CHIP 0.01UF	10.00% 25V
C3128	1-162-970-11	CERAMIC CHIP 0.01UF	10.00% 25V
C3129	1-162-970-11	CERAMIC CHIP 0.01UF	10.00% 25V
C3130	1-162-970-11	CERAMIC CHIP 0.01UF	10.00% 25V
C3131	1-162-970-11	CERAMIC CHIP 0.01UF	10.00% 25V
C3132	1-162-970-11	CERAMIC CHIP 0.01UF	10.00% 25V
C3133	1-162-970-11	CERAMIC CHIP 0.01UF	10.00% 25V
C3134	1-162-970-11	CERAMIC CHIP 0.01UF	10.00% 25V
C3135	1-162-970-11	CERAMIC CHIP 0.01UF	10.00% 25V
C3136	1-162-970-11	CERAMIC CHIP 0.01UF	10.00% 25V
C3137	1-162-970-11	CERAMIC CHIP 0.01UF	10.00% 25V
C3139	1-124-779-00	ELECT CHIP 10UF	20.00% 16V
C3140	1-162-970-11	CERAMIC CHIP 0.01UF	10.00% 25V
C3141	1-162-970-11	CERAMIC CHIP 0.01UF	10.00% 25V
C3142	1-162-970-11	CERAMIC CHIP 0.01UF	10.00% 25V
C3143	1-162-970-11	CERAMIC CHIP 0.01UF	10.00% 25V
C3144	1-162-970-11	CERAMIC CHIP 0.01UF	10.00% 25V
C3148	1-124-779-00	ELECT CHIP 10UF	20.00% 16V
C3149	1-124-779-00	ELECT CHIP 10UF	20.00% 16V
C3150	1-162-970-11	CERAMIC CHIP 0.01UF	10.00% 25V
C3151	1-162-970-11	CERAMIC CHIP 0.01UF	10.00% 25V
C3152	1-124-779-00	ELECT CHIP 10UF	20.00% 16V
C3153	1-124-779-00	ELECT CHIP 10UF	20.00% 16V
C3154	1-124-779-00	ELECT CHIP 10UF	20.00% 16V
C3155	1-124-779-00	ELECT CHIP 10UF	20.00% 16V
C3156	1-162-970-11	CERAMIC CHIP 0.01UF	10.00% 25V
C3157	1-107-826-11	CERAMIC CHIP 0.1UF	10.00% 16V
C3159	1-107-826-11	CERAMIC CHIP 0.1UF	10.00% 16V
C3160	1-107-826-11	CERAMIC CHIP 0.1UF	10.00% 16V
C3161	1-107-826-11	CERAMIC CHIP 0.1UF	10.00% 16V
C3162	1-107-826-11	CERAMIC CHIP 0.1UF	10.00% 16V
C3164	1-124-779-00	ELECT CHIP 10UF	20.00% 16V
C3165	1-107-826-11	CERAMIC CHIP 0.1UF	10.00% 16V
C3166	1-107-826-11	CERAMIC CHIP 0.1UF	10.00% 16V
C3167	1-107-826-11	CERAMIC CHIP 0.1UF	10.00% 16V
C3168	1-107-826-11	CERAMIC CHIP 0.1UF	10.00% 16V
C3170	1-124-779-00	ELECT CHIP 10UF	20.00% 16V
C3176	1-124-779-00	ELECT CHIP 10UF	20.00% 16V
C3200	1-125-891-11	CERAMIC CHIP 0.47UF	10.00% 10V
C3201	1-162-970-11	CERAMIC CHIP 0.01UF	10.00% 25V
C3202	1-126-601-11	ELECT CHIP 2.2UF	20.00% 50V
C3203	1-164-227-11	CERAMIC CHIP 0.022UF	10.00% 25V
C3204	1-107-826-11	CERAMIC CHIP 0.1UF	10.00% 16V
C3205	1-115-156-11	CERAMIC CHIP 1UF	10V
C3206	1-126-204-11	ELECT CHIP 47UF	20.00% 16V
C3207	1-126-204-11	ELECT CHIP 47UF	20.00% 16V
C3208	1-126-204-11	ELECT CHIP 47UF	20.00% 16V
C3209	1-162-915-11	CERAMIC CHIP 10PF	0.50PF 50V
C3210	1-107-826-11	CERAMIC CHIP 0.1UF	10.00% 16V
C3211	1-107-826-11	CERAMIC CHIP 0.1UF	10.00% 16V
C3212	1-107-826-11	CERAMIC CHIP 0.1UF	10.00% 16V
C3213	1-124-779-00	ELECT CHIP 10UF	20.00% 16V
C3214	1-107-826-11	CERAMIC CHIP 0.1UF	10.00% 16V
C3215	1-162-970-11	CERAMIC CHIP 0.01UF	10.00% 25V
C3217	1-162-970-11	CERAMIC CHIP 0.01UF	10.00% 25V
C3218	1-126-603-11	ELECT CHIP 4.7UF	20.00% 35V
C3219	1-124-779-00	ELECT CHIP 10UF	20.00% 16V
C3220	1-107-826-11	CERAMIC CHIP 0.1UF	10.00% 16V
C3221	1-107-826-11	CERAMIC CHIP 0.1UF	10.00% 16V
C3222	1-107-826-11	CERAMIC CHIP 0.1UF	10.00% 16V
C3223	1-107-826-11	CERAMIC CHIP 0.1UF	10.00% 16V
C3224	1-124-779-00	ELECT CHIP 10UF	20.00% 16V
C3226	1-124-779-00	ELECT CHIP 10UF	20.00% 16V
C3228	1-124-779-00	ELECT CHIP 10UF	20.00% 16V
C3230	1-162-970-11	CERAMIC CHIP 0.01UF	10.00% 25V
C3231	1-162-970-11	CERAMIC CHIP 0.01UF	10.00% 25V
C3232	1-162-970-11	CERAMIC CHIP 0.01UF	10.00% 25V

REF.NO.	PART.NO	DESCRIPTION	REMARK
C3233	1-162-970-11	CERAMIC CHIP 0.01UF	10.00% 25V
C3234	1-162-970-11	CERAMIC CHIP 0.01UF	10.00% 25V
C3237	1-162-970-11	CERAMIC CHIP 0.01UF	10.00% 25V
C4201	1-162-970-11	CERAMIC CHIP 0.01UF	10.00% 25V
C4202	1-162-970-11	CERAMIC CHIP 0.01UF	10.00% 25V
C4203	1-126-206-11	ELECT CHIP 100UF	20.00% 6.3V
C4204	1-162-970-11	CERAMIC CHIP 0.01UF	10.00% 25V
C4205	1-162-970-11	CERAMIC CHIP 0.01UF	10.00% 25V
C4206	1-162-970-11	CERAMIC CHIP 0.01UF	10.00% 25V
C4207	1-162-970-11	CERAMIC CHIP 0.01UF	10.00% 25V
C4208	1-124-779-00	ELECT CHIP 10UF	20.00% 16V
C4209	1-124-779-00	ELECT CHIP 10UF	20.00% 16V
C4210	1-162-970-11	CERAMIC CHIP 0.01UF	10.00% 25V
C4211	1-162-970-11	CERAMIC CHIP 0.01UF	10.00% 25V
C4212	1-162-970-11	CERAMIC CHIP 0.01UF	10.00% 25V
C4213	1-162-970-11	CERAMIC CHIP 0.01UF	10.00% 25V
C4214	1-162-970-11	CERAMIC CHIP 0.01UF	10.00% 25V
C4215	1-162-970-11	CERAMIC CHIP 0.01UF	10.00% 25V
C4216	1-162-970-11	CERAMIC CHIP 0.01UF	10.00% 25V
C4217	1-162-970-11	CERAMIC CHIP 0.01UF	10.00% 25V
C4218	1-162-970-11	CERAMIC CHIP 0.01UF	10.00% 25V
C4219	1-162-970-11	CERAMIC CHIP 0.01UF	10.00% 25V
C4220	1-162-970-11	CERAMIC CHIP 0.01UF	10.00% 25V
C4221	1-162-970-11	CERAMIC CHIP 0.01UF	10.00% 25V
C4222	1-162-970-11	CERAMIC CHIP 0.01UF	10.00% 25V
C4223	1-162-970-11	CERAMIC CHIP 0.01UF	10.00% 25V
C4224	1-162-970-11	CERAMIC CHIP 0.01UF	10.00% 25V
C4225	1-162-970-11	CERAMIC CHIP 0.01UF	10.00% 25V
C4226	1-162-970-11	CERAMIC CHIP 0.01UF	10.00% 25V
C4227	1-162-970-11	CERAMIC CHIP 0.01UF	10.00% 25V
C4228	1-162-970-11	CERAMIC CHIP 0.01UF	10.00% 25V
C4229	1-162-970-11	CERAMIC CHIP 0.01UF	10.00% 25V
C4230	1-162-970-11	CERAMIC CHIP 0.01UF	10.00% 25V
C4231	1-162-970-11	CERAMIC CHIP 0.01UF	10.00% 25V
C4232	1-162-970-11	CERAMIC CHIP 0.01UF	10.00% 25V
C4233	1-162-970-11	CERAMIC CHIP 0.01UF	10.00% 25V
C4234	1-107-826-11	CERAMIC CHIP 0.1UF	10.00% 16V
C4235	1-107-826-11	CERAMIC CHIP 0.1UF	10.00% 16V
C4236	1-162-970-11	CERAMIC CHIP 0.01UF	10.00% 25V
C4237	1-107-826-11	CERAMIC CHIP 0.1UF	10.00% 16V
C4238	1-126-204-11	ELECT CHIP 47UF	20.00% 16V
C4246	1-162-970-11	CERAMIC CHIP 0.01UF	10.00% 25V
C4340	1-162-970-11	CERAMIC CHIP 0.01UF	10.00% 25V
C4341	1-162-970-11	CERAMIC CHIP 0.01UF	10.00% 25V
C4342	1-162-970-11	CERAMIC CHIP 0.01UF	10.00% 25V
C4343	1-162-970-11	CERAMIC CHIP 0.01UF	10.00% 25V
C4344	1-162-970-11	CERAMIC CHIP 0.01UF	10.00% 25V
C4345	1-162-970-11	CERAMIC CHIP 0.01UF	10.00% 25V
C4346	1-162-970-11	CERAMIC CHIP 0.01UF	10.00% 25V
C4347	1-162-970-11	CERAMIC CHIP 0.01UF	10.00% 25V
C4348	1-162-970-11	CERAMIC CHIP 0.01UF	10.00% 25V
C4349	1-162-970-11	CERAMIC CHIP 0.01UF	10.00% 25V
C4350	1-162-970-11	CERAMIC CHIP 0.01UF	10.00% 25V
C4351	1-162-970-11	CERAMIC CHIP 0.01UF	10.00% 25V
C4352	1-162-970-11	CERAMIC CHIP 0.01UF	10.00% 25V
C4370	1-124-779-00	ELECT CHIP 10UF	20.00% 16V
C4371	1-126-204-11	ELECT CHIP 47UF	20.00% 16V
C4372	1-126-204-11	ELECT CHIP 47UF	20.00% 16V
C4426	1-126-204-11	ELECT CHIP 47UF	20.00% 16V
C4429	1-162-970-11	CERAMIC CHIP 0.01UF	10.00% 25V
C4430	1-162-970-11	CERAMIC CHIP 0.01UF	10.00% 25V
C4431	1-162-970-11	CERAMIC CHIP 0.01UF	10.00% 25V
C4432	1-162-970-11	CERAMIC CHIP 0.01UF	10.00% 25V
C4433	1-126-206-11	ELECT CHIP 100UF	20.00% 6.3V
C4434	1-107-826-11	CERAMIC CHIP 0.1UF	10.00% 16V
C4438	1-162-970-11	CERAMIC CHIP 0.01UF	10.00% 25V
C4442	1-126-204-11	ELECT CHIP 47UF	20.00% 16V
C4443	1-162-970-11	CERAMIC CHIP 0.01UF	10.00% 25V
C4444	1-162-970-11	CERAMIC CHIP 0.01UF	10.00% 25V
C4445	1-162-970-11	CERAMIC CHIP 0.01UF	10.00% 25V
C4446	1-126-204-11	ELECT CHIP 47UF	20.00% 16V
C4447	1-126-204-11	ELECT CHIP 47UF	20.00% 16V
C4448	1-126-204-11	ELECT CHIP 47UF	20.00% 16V
C4450	1-162-970-11	CERAMIC CHIP 0.01UF	10.00% 25V
C4451	1-162-970-11	CERAMIC CHIP 0.01UF	10.00% 25V
C4452	1-162-970-11	CERAMIC CHIP 0.01UF	10.00% 25V
C4453	1-162-970-11	CERAMIC CHIP 0.01UF	10.00% 25V
C4454	1-162-970-11	CERAMIC CHIP 0.01UF	10.00% 25V
C4463	1-126-204-11	ELECT CHIP 47UF	20.00% 16V
C4464	1-162-970-11	CERAMIC CHIP 0.01UF	10.00% 25V
C4465	1-162-970-11	CERAMIC CHIP 0.01UF	10.00% 25V
C4466	1-162-970-11	CERAMIC CHIP 0.01UF	10.00% 25V
C4467	1-162-970-11	CERAMIC CHIP 0.01UF	10.00% 25V
C4468	1-162-970-11	CERAMIC CHIP 0.01UF	10.00% 25V
C4469	1-162-970-11	CERAMIC CHIP 0.01UF	10.00% 25V
C4470	1-162-970-11	CERAMIC CHIP 0.01UF	10.00% 25V
C4471	1-162-970-11	CERAMIC CHIP 0.01UF	10.00% 25V
C4472	1-162-970-11	CERAMIC CHIP 0.01UF	10.00% 25V
C4473	1-162-970-11	CERAMIC CHIP 0.01UF	10.00% 25V
C4474	1-162-970-11	CERAMIC CHIP 0.01UF	10.00% 25V
C4475	1-162-970-11	CERAMIC CHIP 0.01UF	10.00% 25V
C4476	1-162-970-11	CERAMIC CHIP 0.01UF	10.00% 25V
C4477	1-162-970-11	CERAMIC CHIP 0.01UF	10.00% 25V
C4478	1-162-970-11	CERAMIC CHIP 0.01UF	10.00% 25V
C4479	1-162-970-11	CERAMIC CHIP 0.01UF	10.00% 25V
C4480	1-162-970-11	CERAMIC CHIP 0.01UF	10.00% 25V
C4481	1-162-970-11	CERAMIC CHIP 0.01UF	10.00% 25V
C4482	1-162-970-11	CERAMIC CHIP 0.01UF	10.00% 25V
C4483	1-126-204-11	ELECT CHIP 47UF	20.00% 16V
C4603	1-162-970-11	CERAMIC CHIP 0.01UF	10.00% 25V

REF.NO.	PART.NO	DESCRIPTION	REMARK
C4604	1-162-970-11	CERAMIC CHIP 0.01UF	10.00% 25V
C4605	1-124-779-00	ELECT CHIP 10UF	20.00% 16V
C4606	1-162-970-11	CERAMIC CHIP 0.01UF	10.00% 25V
C4607	1-124-779-00	ELECT CHIP 10UF	20.00% 16V
C4608	1-162-970-11	CERAMIC CHIP 0.01UF	10.00% 25V
C4609	1-124-779-00	ELECT CHIP 10UF	20.00% 16V
C4610	1-124-779-00	ELECT CHIP 10UF	20.00% 16V
C4611	1-162-970-11	CERAMIC CHIP 0.01UF	10.00% 25V
C4612	1-162-970-11	CERAMIC CHIP 0.01UF	10.00% 25V
C4613	1-162-970-11	CERAMIC CHIP 0.01UF	10.00% 25V
C4614	1-162-970-11	CERAMIC CHIP 0.01UF	10.00% 25V
C4615	1-162-970-11	CERAMIC CHIP 0.01UF	10.00% 25V
C4616	1-162-970-11	CERAMIC CHIP 0.01UF	10.00% 25V
C4617	1-162-970-11	CERAMIC CHIP 0.01UF	10.00% 25V
C4618	1-162-970-11	CERAMIC CHIP 0.01UF	10.00% 25V
C4620	1-162-968-11	CERAMIC CHIP 0.0047UF	10.00% 50V
C4621	1-162-970-11	CERAMIC CHIP 0.01UF	10.00% 25V
C4622	1-162-916-11	CERAMIC CHIP 12PF	5.00% 50V
C4623	1-162-970-11	CERAMIC CHIP 0.01UF	10.00% 25V
C4624	1-162-916-11	CERAMIC CHIP 12PF	5.00% 50V
C4625	1-162-970-11	CERAMIC CHIP 0.01UF	10.00% 25V
C4626	1-162-970-11	CERAMIC CHIP 0.01UF	10.00% 25V
C4627	1-162-970-11	CERAMIC CHIP 0.01UF	10.00% 25V
C4628	1-162-970-11	CERAMIC CHIP 0.01UF	10.00% 25V
C4629	1-162-970-11	CERAMIC CHIP 0.01UF	10.00% 25V
C4630	1-162-970-11	CERAMIC CHIP 0.01UF	10.00% 25V
C4631	1-162-970-11	CERAMIC CHIP 0.01UF	10.00% 25V
C4632	1-162-970-11	CERAMIC CHIP 0.01UF	10.00% 25V
C4633	1-162-970-11	CERAMIC CHIP 0.01UF	10.00% 25V
C4634	1-107-826-11	CERAMIC CHIP 0.1UF	10.00% 16V
C4635	1-162-970-11	CERAMIC CHIP 0.01UF	10.00% 25V
C4636	1-126-206-11	ELECT CHIP 100UF	20.00% 6.3V
C4637	1-162-970-11	CERAMIC CHIP 0.01UF	10.00% 25V
C4644	1-124-779-00	ELECT CHIP 10UF	20.00% 16V
C4648	1-107-826-11	CERAMIC CHIP 0.1UF	10.00% 16V
C4649	1-107-826-11	CERAMIC CHIP 0.1UF	10.00% 16V
C4650	1-107-826-11	CERAMIC CHIP 0.1UF	10.00% 16V
C4652	1-162-970-11	CERAMIC CHIP 0.01UF	10.00% 25V
C4653	1-162-970-11	CERAMIC CHIP 0.01UF	10.00% 25V
C4700	1-162-970-11	CERAMIC CHIP 0.01UF	10.00% 25V
C4701	1-107-826-11	CERAMIC CHIP 0.1UF	10.00% 16V
C4702	1-107-826-11	CERAMIC CHIP 0.1UF	10.00% 16V
C4800	1-162-970-11	CERAMIC CHIP 0.01UF	10.00% 25V
C4801	1-162-970-11	CERAMIC CHIP 0.01UF	10.00% 25V
C4802	1-162-970-11	CERAMIC CHIP 0.01UF	10.00% 25V
C4803	1-162-970-11	CERAMIC CHIP 0.01UF	10.00% 25V
C4804	1-126-603-11	ELECT CHIP 4.7UF	20.00% 35V
C4805	1-162-970-11	CERAMIC CHIP 0.01UF	10.00% 25V
C4806	1-162-970-11	CERAMIC CHIP 0.01UF	10.00% 25V
C4807	1-162-970-11	CERAMIC CHIP 0.01UF	10.00% 25V

REF.NO.	PART.NO	DESCRIPTION	REMARK
C4909	1-162-927-11	CERAMIC CHIP 100PF	5.00% 50V
C4910	1-162-927-11	CERAMIC CHIP 100PF	5.00% 50V
		< CONNECTOR >	
CN4472	1-816-448-11	CONNECTOR, BOARD TO BOARD 50P	
CN4475	1-794-959-21	PIN, CONNECTOR (PWB, PRINT)20P	
		< DIODE >	
D4400	8-719-083-58	DIODE UDZSTE-173.9B	
D4602	8-719-158-02	DIODE RD3.9SB2	
D4603	8-719-914-42	DIODE DA204K	
		< FERRITE BEAD >	
FB4302	1-414-760-21	FERRITE 0UH	
FB4303	1-414-760-21	FERRITE 0UH	
FB4400	1-414-760-21	FERRITE 0UH	
FB4401	1-414-760-21	FERRITE 0UH	
FB4402	1-414-760-21	FERRITE 0UH	
FB4403	1-414-760-21	FERRITE 0UH	
FB4404	1-414-760-21	FERRITE 0UH	
FB4405	1-414-760-21	FERRITE 0UH	
FB4600	1-414-760-21	FERRITE 0UH	
FB4601	1-414-760-21	FERRITE 0UH	
FB4614	1-414-921-11	FERRITE 0UH	
FB4615	1-414-921-11	FERRITE 0UH	
FB4616	1-414-921-11	FERRITE 0UH	
FB4619	1-414-921-11	FERRITE 0UH	
FB4620	1-469-568-21	FERRITE 0UH	
		< FILTER >	
FL3100	1-233-877-11	FILTER, LOW PASS	
FL3101	1-234-177-21	FERRITE 0UH	
FL3102	1-234-177-21	FERRITE 0UH	
FL3103	1-233-877-11	FILTER, LOW PASS	
FL3104	1-234-177-21	FERRITE 0UH	
FL3105	1-233-877-11	FILTER, LOW PASS	
FL3106	1-233-877-11	FILTER, LOW PASS	
FL3107	1-233-877-11	FILTER, LOW PASS	
FL3108	1-233-877-11	FILTER, LOW PASS	
FL3109	1-234-177-21	FERRITE 0UH	
FL3110	1-234-177-21	FERRITE 0UH	
FL3200	1-234-177-21	FERRITE 0UH	
FL3201	1-234-177-21	FERRITE 0UH	
FL3202	1-234-177-21	FERRITE 0UH	
FL3203	1-234-177-21	FERRITE 0UH	
FL3204	1-233-877-11	FILTER, LOW PASS	
FL3205	1-233-504-21	FILTER, LOW PASS	
FL3206	1-233-504-21	FILTER, LOW PASS	
FL4200	1-234-177-21	FERRITE 0UH	
FL4201	1-234-177-21	FERRITE 0UH	

REF.NO.	PART.NO	DESCRIPTION	REMARK
FL4202	1-234-177-21	FERRITE 0UH	
FL4203	1-239-560-11	FILTER, CHIP EMI	
FL4310	1-234-177-21	FERRITE 0UH	
FL4405	1-234-177-21	FERRITE 0UH	
FL4406	1-234-177-21	FERRITE 0UH	
FL4407	1-234-177-21	FERRITE 0UH	
FL4408	1-234-177-21	FERRITE 0UH	
FL4409	1-234-177-21	FERRITE 0UH	
FL4410	1-234-177-21	FERRITE 0UH	
FL4411	1-234-177-21	FERRITE 0UH	
FL4412	1-234-177-21	FERRITE 0UH	
FL4600	1-234-177-21	FERRITE 0UH	
FL4601	1-234-177-21	FERRITE 0UH	
FL4602	1-234-177-21	FERRITE 0UH	
FL4603	1-234-177-21	FERRITE 0UH	
FL4604	1-234-177-21	FERRITE 0UH	
FL4606	1-234-177-21	FERRITE 0UH	
FL4607	1-234-177-21	FERRITE 0UH	
FL4608	1-234-494-21	FILTER, EMI REMOVAL (SMD)	
FL4902	1-234-113-21	FILTER, LOW PASS	
FL4903	1-234-112-21	FILTER, LOW PASS	
FL4904	1-234-112-21	FILTER, LOW PASS	
FL4905	1-239-558-11	FILTER, CHIP EMI	
		< IC >	
IC3100	8-752-413-28	IC CXD2096Q	
IC3200	8-752-099-05	IC CXA2163AQ-T6	
IC3201	8-759-485-79	IC TC7SET08FU(TE85L)	
IC4201	6-701-120-01	IC W981616BH-7-EL-10	
IC4203	8-752-409-78	IC CXD2095AQ	
IC4304	6-700-797-01	IC CXD9666Q	
IC4401	6-702-070-01	IC CXD9665Q	
IC4402	8-759-640-16	IC TC7SET04F(TE85R)	
IC4403	8-759-640-16	IC TC7SET04F(TE85R)	
IC4404	8-759-669-78	IC TLC2933IPWR-12	
IC4600	8-759-672-57	IC CXD9509AQ	
IC4602	8-759-677-37	IC MT48LC2M32B2TG-7	
IC4603	8-759-639-85	IC SN65LVDS31DR	
IC4604	6-701-762-11	IC DS90LV018ATMX	
IC4605	8-759-698-08	IC SN74CBTLV1G125DCKR	
IC4800	8-759-525-10	IC TC7SET08F(TE85L)	
IC4801	8-759-669-75	IC TLC2932IPWR	
IC4802	8-759-525-10	IC TC7SET08F(TE85L)	
IC4803	8-759-525-10	IC TC7SET08F(TE85L)	
		< COIL >	
L3102	1-412-026-11	INDUCTOR 1UH	
L4300	1-469-525-91	INDUCTOR 10UH	
L4301	1-469-525-91	INDUCTOR 10UH	
L4400	1-469-525-91	INDUCTOR 10UH	
L4401	1-469-525-91	INDUCTOR 10UH	
L4402	1-412-026-11	INDUCTOR 1UH	
L4403	1-469-522-91	INDUCTOR 1UH	
L4404	1-469-522-91	INDUCTOR 1UH	
L4405	1-469-522-91	INDUCTOR 1UH	
L4406	1-469-525-91	INDUCTOR 10UH	
L4408	1-469-522-91	INDUCTOR 1UH	
L4409	1-469-522-91	INDUCTOR 1UH	
L4410	1-469-522-91	INDUCTOR 1UH	
L4411	1-469-525-91	INDUCTOR 10UH	
L4412	1-412-026-11	INDUCTOR 1UH	
L4601	1-419-370-21	INDUCTOR 0UH	
L4602	1-419-370-21	INDUCTOR 0UH	
L4603	1-419-370-21	INDUCTOR 0UH	
L4604	1-419-370-21	INDUCTOR 0UH	
L4608	1-419-370-21	INDUCTOR 0UH	
L4801	1-469-525-91	INDUCTOR 10UH	
L4802	1-469-525-91	INDUCTOR 10UH	
		< TRANSISTOR >	
Q3100	8-729-422-33	TRANSISTOR 2SD601A-Q-TX	
Q3102	8-729-422-33	TRANSISTOR 2SD601A-Q-TX	
Q3104	8-729-026-49	TRANSISTOR 2SA1037AK-T146-R	
Q3106	8-729-422-33	TRANSISTOR 2SD601A-Q-TX	
Q3107	8-729-026-49	TRANSISTOR 2SA1037AK-T146-R	
Q3108	8-729-422-33	TRANSISTOR 2SD601A-Q-TX	
Q3109	8-729-026-49	TRANSISTOR 2SA1037AK-T146-R	
Q3110	8-729-422-33	TRANSISTOR 2SD601A-Q-TX	
Q3111	8-729-026-49	TRANSISTOR 2SA1037AK-T146-R	
Q3112	8-729-422-33	TRANSISTOR 2SD601A-Q-TX	
Q3113	8-729-422-33	TRANSISTOR 2SD601A-Q-TX	
Q3114	8-729-422-33	TRANSISTOR 2SD601A-Q-TX	
Q3116	8-729-422-33	TRANSISTOR 2SD601A-Q-TX	
Q3117	8-729-422-33	TRANSISTOR 2SD601A-Q-TX	
Q3118	8-729-026-49	TRANSISTOR 2SA1037AK-T146-R	
Q3119	8-729-026-49	TRANSISTOR 2SA1037AK-T146-R	
Q3120	8-729-422-33	TRANSISTOR 2SD601A-Q-TX	
Q3122	8-729-422-33	TRANSISTOR 2SD601A-Q-TX	
Q3200	8-729-422-33	TRANSISTOR 2SD601A-Q-TX	
Q3201	8-729-422-33	TRANSISTOR 2SD601A-Q-TX	
Q3202	8-729-422-33	TRANSISTOR 2SD601A-Q-TX	
Q3203	8-729-422-33	TRANSISTOR 2SD601A-Q-TX	
Q3204	8-729-026-49	TRANSISTOR 2SA1037AK-T146-R	
Q3205	8-729-026-49	TRANSISTOR 2SA1037AK-T146-R	
Q3206	8-729-026-49	TRANSISTOR 2SA1037AK-T146-R	
Q3207	8-729-422-33	TRANSISTOR 2SD601A-Q-TX	
Q3208	8-729-422-33	TRANSISTOR 2SD601A-Q-TX	
Q3209	8-729-422-33	TRANSISTOR 2SD601A-Q-TX	
Q3210	8-729-422-33	TRANSISTOR 2SD601A-Q-TX	
Q3211	8-729-422-33	TRANSISTOR 2SD601A-Q-TX	

REF.NO.	PART.NO	DESCRIPTION			REMARK
Q3212	8-729-422-33	TRANSISTOR 2SD601A-Q-TX			
Q4300	8-729-026-49	TRANSISTOR 2SA1037AK-T146-R			
Q4301	8-729-026-49	TRANSISTOR 2SA1037AK-T146-R			
Q4302	8-729-026-49	TRANSISTOR 2SA1037AK-T146-R			
Q4401	8-729-028-28	TRANSISTOR 2SK2036(TE85L)			
Q4402	8-729-028-28	TRANSISTOR 2SK2036(TE85L)			
Q4405	8-729-422-33	TRANSISTOR 2SD601A-Q-TX			
Q4406	8-729-026-49	TRANSISTOR 2SA1037AK-T146-R			
Q4407	8-729-422-33	TRANSISTOR 2SD601A-Q-TX			
Q4408	8-729-422-33	TRANSISTOR 2SD601A-Q-TX			
Q4412	1-801-806-11	TR DTC144EKA			
Q4413	1-801-806-11	TR DTC144EKA			
Q4600	8-729-422-33	TRANSISTOR 2SD601A-Q-TX			
Q4903	8-729-026-49	TRANSISTOR 2SA1037AK-T146-R			
Q4904	8-729-026-49	TRANSISTOR 2SA1037AK-T146-R			
Q4905	8-729-026-49	TRANSISTOR 2SA1037AK-T146-R			
		< RESISTOR >			
R3100	1-216-864-11	SHORT CHIP	0		
R3101	1-216-864-11	SHORT CHIP	0		
R3102	1-216-813-11	RES-CHIP	220	5%	1/10W
R3103	1-216-813-11	RES-CHIP	220	5%	1/10W
R3104	1-216-815-11	RES-CHIP	330	5%	1/10W
R3105	1-218-843-11	METAL CHIP	680	0.5%	1/10W
R3106	1-218-847-11	METAL CHIP	1K	0.5%	1/10W
R3107	1-216-864-11	SHORT CHIP	0		
R3108	1-218-843-11	METAL CHIP	680	0.5%	1/10W
R3109	1-218-847-11	METAL CHIP	1K	0.5%	1/10W
R3110	1-216-864-11	SHORT CHIP	0		
R3111	1-218-865-11	METAL CHIP	5.6K	0.5%	1/10W
R3112	1-216-818-11	RES-CHIP	560	5%	1/10W
R3113	1-216-818-11	RES-CHIP	560	5%	1/10W
R3114	1-216-864-11	SHORT CHIP	0		
R3115	1-216-864-11	SHORT CHIP	0		
R3119	1-216-815-11	RES-CHIP	330	5%	1/10W
R3120	1-218-865-11	METAL CHIP	5.6K	0.5%	1/10W
R3121	1-216-864-11	SHORT CHIP	0		
R3122	1-216-864-11	SHORT CHIP	0		
R3123	1-216-864-11	SHORT CHIP	0		
R3124	1-216-864-11	SHORT CHIP	0		
R3125	1-216-864-11	SHORT CHIP	0		
R3126	1-216-864-11	SHORT CHIP	0		
R3127	1-216-864-11	SHORT CHIP	0		
R3128	1-216-818-11	RES-CHIP	560	5%	1/10W
R3129	1-216-864-11	SHORT CHIP	0		
R3130	1-216-818-11	RES-CHIP	560	5%	1/10W
R3131	1-216-809-11	RES-CHIP	100	5%	1/10W
R3132	1-216-815-11	RES-CHIP	330	5%	1/10W
R3133	1-218-865-11	METAL CHIP	5.6K	0.5%	1/10W
R3134	1-216-818-11	RES-CHIP	560	5%	1/10W
R3135	1-216-818-11	RES-CHIP	560	5%	1/10W
R3136	1-216-815-11	RES-CHIP	330	5%	1/10W
R3137	1-218-865-11	METAL CHIP	5.6K	0.5%	1/10W
R3138	1-216-813-11	RES-CHIP	220	5%	1/10W
R3139	1-216-864-11	SHORT CHIP	0		
R3140	1-216-813-11	RES-CHIP	220	5%	1/10W
R3141	1-216-813-11	RES-CHIP	220	5%	1/10W
R3142	1-216-818-11	RES-CHIP	560	5%	1/10W
R3143	1-216-821-11	RES-CHIP	1K	5%	1/10W
R3144	1-218-835-11	METAL CHIP	330	0.5%	1/10W
R3145	1-216-821-11	RES-CHIP	1K	5%	1/10W
R3146	1-218-843-11	METAL CHIP	680	0.5%	1/10W
R3147	1-218-847-11	METAL CHIP	1K	0.5%	1/10W
R3148	1-216-864-11	SHORT CHIP	0		
R3149	1-216-818-11	RES-CHIP	560	5%	1/10W
R3150	1-216-815-11	RES-CHIP	330	5%	1/10W
R3151	1-216-815-11	RES-CHIP	330	5%	1/10W
R3152	1-218-865-11	METAL CHIP	5.6K	0.5%	1/10W
R3153	1-218-865-11	METAL CHIP	5.6K	0.5%	1/10W
R3154	1-216-818-11	RES-CHIP	560	5%	1/10W
R3155	1-216-818-11	RES-CHIP	560	5%	1/10W
R3156	1-216-818-11	RES-CHIP	560	5%	1/10W
R3157	1-216-818-11	RES-CHIP	560	5%	1/10W
R3160	1-216-864-11	SHORT CHIP	0		
R3162	1-216-864-11	SHORT CHIP	0		
R3164	1-216-864-11	SHORT CHIP	0		
R3166	1-216-864-11	SHORT CHIP	0		
R3168	1-216-864-11	SHORT CHIP	0		
R3174	1-216-841-11	RES-CHIP	47K	5%	1/10W
R3175	1-216-841-11	RES-CHIP	47K	5%	1/10W
R3186	1-216-841-11	RES CHIP	47K	5%	1/10W
R3187	1-216-841-11	RES CHIP	47K	5%	1/10W
R3192	1-216-841-11	RES CHIP	47K	5%	1/10W
R3193	1-216-841-11	RES CHIP	47K	5%	1/10W
R3198	1-216-841-11	RES CHIP	47K	5%	1/10W
R3199	1-216-841-11	RES CHIP	47K	5%	1/10W
R3200	1-216-864-11	SHORT CHIP	0		
R3201	1-216-864-11	SHORT CHIP	0		
R3202	1-216-838-11	RES-CHIP	27K	5%	1/10W
R3203	1-220-397-11	RES-CHIP	4.7M	5%	1/10W
R3204	1-218-861-11	METAL CHIP	3.9K	0.5%	1/10W
R3205	1-216-841-11	RES-CHIP	47K	5%	1/10W
R3206	1-216-821-11	RES-CHIP	1K	5%	1/10W
R3207	1-216-809-11	RES-CHIP	100	5%	1/10W
R3208	1-216-805-11	RES-CHIP	47	5%	1/10W
R3209	1-216-864-11	SHORT CHIP	0		
R3210	1-216-864-11	SHORT CHIP	0		
R3211	1-216-805-11	RES-CHIP	47	5%	1/10W
R3212	1-216-809-11	RES-CHIP	100	5%	1/10W

REF.NO.	PART.NO	DESCRIPTION			REMARK
R3213	1-216-809-11	RES-CHIP	100	5%	1/10W
R3214	1-216-864-11	SHORT CHIP	0		
R3217	1-216-821-11	RES-CHIP	1K	5%	1/10W
R3218	1-216-821-11	RES-CHIP	1K	5%	1/10W
R3219	1-216-809-11	RES-CHIP	100	5%	1/10W
R3223	1-216-821-11	RES-CHIP	1K	5%	1/10W
R3224	1-216-817-11	RES-CHIP	470	5%	1/10W
R3225	1-216-817-11	RES-CHIP	470	5%	1/10W
R3226	1-216-817-11	RES-CHIP	470	5%	1/10W
R3227	1-216-817-11	RES-CHIP	470	5%	1/10W
R3228	1-216-864-11	SHORT CHIP	0		
R3230	1-216-864-11	SHORT CHIP	0		
R3232	1-216-864-11	SHORT CHIP	0		
R3234	1-216-813-11	RES-CHIP	220	5%	1/10W
R3235	1-216-813-11	RES-CHIP	220	5%	1/10W
R3236	1-218-865-11	METAL CHIP	5.6K	0.5%	1/10W
R3237	1-218-865-11	METAL CHIP	5.6K	0.5%	1/10W
R3238	1-218-865-11	METAL CHIP	5.6K	0.5%	1/10W
R3239	1-216-817-11	RES-CHIP	470	5%	1/10W
R3240	1-216-817-11	RES-CHIP	470	5%	1/10W
R3241	1-216-817-11	RES-CHIP	470	5%	1/10W
R3242	1-218-859-11	METAL CHIP	3.3K	0.5%	1/10W
R3244	1-218-859-11	METAL CHIP	3.3K	0.5%	1/10W
R3251	1-216-825-11	RES-CHIP	2.2K	5%	1/10W
R3253	1-218-859-11	METAL CHIP	3.3K	0.5%	1/10W
R3255	1-216-829-11	RES-CHIP	4.7K	5%	1/10W
R3256	1-216-829-11	RES-CHIP	4.7K	5%	1/10W
R3257	1-216-821-11	RES-CHIP	1K	5%	1/10W
R3258	1-216-821-11	RES-CHIP	1K	5%	1/10W
R3259	1-216-864-11	SHORT CHIP	0		
R3260	1-216-864-11	SHORT CHIP	0		
R3262	1-216-817-11	RES-CHIP	470	5%	1/10W
R3263	1-216-817-11	RES-CHIP	470	5%	1/10W
R3264	1-216-817-11	RES-CHIP	470	5%	1/10W
R3267	1-216-829-11	RES-CHIP	4.7K	5%	1/10W
R3268	1-216-821-11	RES-CHIP	1K	5%	1/10W
R3269	1-216-821-11	RES-CHIP	1K	5%	1/10W
R3272	1-216-818-11	RES-CHIP	560	5%	1/10W
R3273	1-216-818-11	RES-CHIP	560	5%	1/10W
R3275	1-216-818-11	RES-CHIP	560	5%	1/10W
R3277	1-216-821-11	RES-CHIP	1K	5%	1/10W
R3278	1-216-821-11	RES-CHIP	1K	5%	1/10W
R3279	1-216-815-11	RES-CHIP	330	5%	1/10W
R3280	1-216-813-11	RES-CHIP	220	5%	1/10W
R3282	1-216-813-11	RES-CHIP	220	5%	1/10W
R3283	1-216-809-11	RES-CHIP	100	5%	1/10W
R3284	1-216-809-11	RES-CHIP	100	5%	1/10W
R3285	1-216-801-11	RES-CHIP	22	5%	1/10W
R3287	1-216-864-11	SHORT CHIP	0		
R3288	1-216-841-11	RES-CHIP	47K	5%	1/10W
R3289	1-216-841-11	RES-CHIP	47K	5%	1/10W
R3292	1-216-864-11	SHORT CHIP	0		
R4200	1-216-805-11	RES-CHIP	47	5%	1/10W
R4201	1-216-801-11	RES-CHIP	22	5%	1/10W
R4209	1-216-864-11	SHORT CHIP	0		
R4211	1-216-801-11	RES-CHIP	22	5%	1/10W
R4212	1-216-833-11	RES-CHIP	10K	5%	1/10W
R4213	1-216-833-11	RES-CHIP	10K	5%	1/10W
R4214	1-216-833-11	RES-CHIP	10K	5%	1/10W
R4215	1-216-864-11	SHORT CHIP	0		
R4216	1-216-864-11	SHORT CHIP	0		
R4219	1-216-833-11	RES-CHIP	10K	5%	1/10W
R4232	1-216-864-11	SHORT CHIP	0		
R4234	1-216-809-11	RES-CHIP	100	5%	1/10W
R4236	1-216-809-11	RES-CHIP	100	5%	1/10W
R4237	1-216-809-11	RES-CHIP	100	5%	1/10W
R4240	1-216-813-11	RES-CHIP	220	5%	1/10W
R4241	1-218-859-11	METAL CHIP	3.3K	0.5%	1/10W
R4242	1-216-813-11	RES-CHIP	220	5%	1/10W
R4243	1-216-813-11	RES-CHIP	220	5%	1/10W
R4244	1-216-805-11	RES-CHIP	47	5%	1/10W
R4249	1-216-814-11	RES-CHIP	270	5%	1/10W
R4250	1-218-842-11	METAL CHIP	620	0.5%	1/10W
R4255	1-216-805-11	RES-CHIP	47	5%	1/10W
R4265	1-216-833-11	RES-CHIP	10K	5%	1/10W
R4267	1-216-864-11	SHORT CHIP	0		
R4268	1-216-833-11	RES-CHIP	10K	5%	1/10W
R4269	1-216-833-11	RES-CHIP	10K	5%	1/10W
R4270	1-216-833-11	RES-CHIP	10K	5%	1/10W
R4271	1-216-833-11	RES-CHIP	10K	5%	1/10W
R4272	1-216-833-11	RES-CHIP	10K	5%	1/10W
R4273	1-216-833-11	RES-CHIP	10K	5%	1/10W
R4277	1-216-864-11	SHORT CHIP	0		
R4310	1-216-801-11	RES-CHIP	22	5%	1/10W
R4311	1-216-864-11	SHORT CHIP	0		
R4312	1-216-864-11	SHORT CHIP	0		
R4313	1-216-864-11	SHORT CHIP	0		
R4314	1-218-857-11	METAL CHIP	2.7K	0.5%	1/10W
R4315	1-218-857-11	METAL CHIP	2.7K	0.5%	1/10W
R4316	1-218-831-11	METAL CHIP	220	0.5%	1/10W
R4317	1-218-831-11	METAL CHIP	220	0.5%	1/10W
R4318	1-218-831-11	METAL CHIP	220	0.5%	1/10W
R4319	1-216-809-11	RES-CHIP	100	5%	1/10W
R4320	1-216-809-11	RES-CHIP	100	5%	1/10W
R4321	1-216-809-11	RES-CHIP	100	5%	1/10W
R4322	1-216-821-11	RES-CHIP	1K	5%	1/10W
R4323	1-216-821-11	RES-CHIP	1K	5%	1/10W
R4324	1-216-821-11	RES-CHIP	1K	5%	1/10W
R4325	1-218-831-11	METAL CHIP	220	0.5%	1/10W
R4326	1-218-831-11	METAL CHIP	220	0.5%	1/10W

REF.NO.	PART.NO	DESCRIPTION			REMARK
R4327	1-218-831-11	METAL CHIP	220	0.5%	1/10W
R4328	1-218-855-11	METAL CHIP	2.2K	0.5%	1/10W
R4329	1-218-847-11	METAL CHIP	1K	0.5%	1/10W
R4330	1-216-809-11	RES-CHIP	100	5%	1/10W
R4331	1-216-809-11	RES-CHIP	100	5%	1/10W
R4332	1-216-809-11	RES-CHIP	100	5%	1/10W
R4334	1-216-809-11	RES-CHIP	100	5%	1/10W
R4335	1-216-809-11	RES-CHIP	100	5%	1/10W
R4336	1-216-809-11	RES-CHIP	100	5%	1/10W
R4337	1-216-809-11	RES-CHIP	100	5%	1/10W
R4338	1-216-807-11	RES-CHIP	68	5%	1/10W
R4423	1-216-825-11	RES-CHIP	2.2K	5%	1/10W
R4424	1-216-829-11	RES-CHIP	4.7K	5%	1/10W
R4425	1-216-825-11	RES-CHIP	2.2K	5%	1/10W
R4427	1-216-829-11	RES-CHIP	4.7K	5%	1/10W
R4429	1-216-864-11	SHORT CHIP	0		
R4430	1-216-864-11	SHORT CHIP	0		
R4431	1-216-864-11	SHORT CHIP	0		
R4432	1-216-864-11	SHORT CHIP	0		
R4433	1-216-864-11	SHORT CHIP	0		
R4439	1-216-833-11	RES-CHIP	10K	5%	1/10W
R4441	1-216-864-11	SHORT CHIP	0		
R4442	1-216-853-11	RES-CHIP	470K	5%	1/10W
R4443	1-216-837-11	RES-CHIP	22K	5%	1/10W
R4444	1-216-813-11	RES-CHIP	220	5%	1/10W
R4445	1-216-815-11	RES-CHIP	330	5%	1/10W
R4446	1-216-813-11	RES-CHIP	220	5%	1/10W
R4447	1-216-809-11	RES-CHIP	100	5%	1/10W
R4448	1-216-821-11	RES-CHIP	1K	5%	1/10W
R4449	1-216-827-11	RES-CHIP	3.3K	5%	1/10W
R4451	1-216-827-11	RES-CHIP	3.3K	5%	1/10W
R4453	1-216-853-11	RES-CHIP	470K	5%	1/10W
R4456	1-216-841-11	RES-CHIP	47K	5%	1/10W
R4457	1-216-841-11	RES-CHIP	47K	5%	1/10W
R4458	1-216-815-11	RES-CHIP	330	5%	1/10W
R4459	1-216-815-11	RES-CHIP	330	5%	1/10W
R4461	1-216-841-11	RES-CHIP	47K	5%	1/10W
R4462	1-216-809-11	RES-CHIP	100	5%	1/10W
R4463	1-216-809-11	RES-CHIP	100	5%	1/10W
R4465	1-216-833-11	RES-CHIP	10K	5%	1/10W
R4466	1-216-809-11	RES-CHIP	100	5%	1/10W
R4467	1-216-809-11	RES-CHIP	100	5%	1/10W
R4468	1-216-809-11	RES-CHIP	100	5%	1/10W
R4469	1-216-809-11	RES-CHIP	100	5%	1/10W
R4470	1-216-809-11	RES-CHIP	100	5%	1/10W
R4472	1-216-833-11	RES-CHIP	10K	5%	1/10W
R4476	1-216-809-11	RES-CHIP	100	5%	1/10W
R4477	1-216-809-11	RES-CHIP	100	5%	1/10W
R4478	1-216-809-11	RES-CHIP	100	5%	1/10W
R4479	1-216-864-11	SHORT CHIP	0		

REF.NO.	PART.NO	DESCRIPTION			REMARK
R4481	1-216-805-11	RES-CHIP	47	5%	1/10W
R4482	1-216-809-11	RES-CHIP	100	5%	1/10W
R4484	1-216-809-11	RES-CHIP	100	5%	1/10W
R4485	1-216-809-11	RES-CHIP	100	5%	1/10W
R4486	1-216-864-11	SHORT CHIP	0		
R4487	1-216-864-11	SHORT CHIP	0		
R4489	1-216-821-11	RES-CHIP	1K	5%	1/10W
R4498	1-216-864-11	SHORT CHIP	0		
R4499	1-216-864-11	SHORT CHIP	0		
R4500	1-216-864-11	SHORT CHIP	0		
R4501	1-216-821-11	RES-CHIP	1K	5%	1/10W
R4502	1-216-805-11	RES-CHIP	47	5%	1/10W
R4600	1-216-827-11	RES-CHIP	3.3K	5%	1/10W
R4601	1-216-864-11	SHORT CHIP	0		
R4602	1-216-825-11	RES-CHIP	2.2K	5%	1/10W
R4603	1-216-864-11	SHORT CHIP	0		
R4607	1-216-833-11	RES-CHIP	10K	5%	1/10W
R4608	1-216-833-11	RES-CHIP	10K	5%	1/10W
R4609	1-216-864-11	SHORT CHIP	0		
R4610	1-216-864-11	SHORT CHIP	0		
R4611	1-216-864-11	SHORT CHIP	0		
R4612	1-216-864-11	SHORT CHIP	0		
R4613	1-216-864-11	SHORT CHIP	0		
R4626	1-216-801-11	RES-CHIP	22	5%	1/10W
R4628	1-216-833-11	RES-CHIP	10K	5%	1/10W
R4629	1-216-833-11	RES-CHIP	10K	5%	1/10W
R4630	1-218-833-11	METAL CHIP	270	0.5%	1/10W
R4632	1-216-864-11	SHORT CHIP	0		
R4633	1-216-864-11	SHORT CHIP	0		
R4634	1-216-833-11	RES-CHIP	10K	5%	1/10W
R4635	1-216-864-11	SHORT CHIP	0		
R4636	1-216-833-11	RES-CHIP	10K	5%	1/10W
R4637	1-216-833-11	RES-CHIP	10K	5%	1/10W
R4638	1-216-833-11	RES-CHIP	10K	5%	1/10W
R4646	1-216-809-11	RES-CHIP	100	5%	1/10W
R4686	1-216-801-11	RES-CHIP	22	5%	1/10W
R4687	1-216-801-11	RES-CHIP	22	5%	1/10W
R4689	1-216-801-11	RES-CHIP	22	5%	1/10W
R4698	1-216-805-11	RES-CHIP	47	5%	1/10W
R4701	1-218-825-11	METAL CHIP	120	0.5%	1/10W
R4702	1-211-989-11	METAL CHIP	68	0.5%	1/10W
R4703	1-211-969-11	METAL CHIP	10	0.5%	1/10W
R4704	1-218-825-11	METAL CHIP	120	0.5%	1/10W
R4705	1-211-990-11	METAL CHIP	75	0.5%	1/10W
R4706	1-211-977-11	METAL CHIP	22	0.5%	1/10W
R4707	1-218-825-11	METAL CHIP	120	0.5%	1/10W
R4708	1-218-823-11	METAL CHIP	100	0.5%	1/10W
R4709	1-211-973-11	METAL CHIP	15	0.5%	1/10W
R4710	1-218-825-11	METAL CHIP	120	0.5%	1/10W
R4711	1-211-990-11	METAL CHIP	75	0.5%	1/10W

Note : The components identified by shading and marked ⚠ are critical for safety. Replace only with the part numbers specified in the parts list.

REF.NO.	PART.NO	DESCRIPTION			REMARK
R4712	1-211-977-11	METAL CHIP	22	0.5%	1/10W
R4800	1-216-815-11	RES-CHIP	330	5%	1/10W
R4801	1-218-272-11	RES-CHIP	5.1K	5%	1/10W
R4802	1-216-801-11	RES-CHIP	22	5%	1/10W
R4803	1-216-820-11	RES-CHIP	820	5%	1/10W
R4804	1-216-821-11	RES-CHIP	1K	5%	1/10W
R4805	1-216-855-11	RES-CHIP	680K	5%	1/10W
R4806	1-216-855-11	RES-CHIP	680K	5%	1/10W
R4807	1-216-864-11	SHORT CHIP	0		
R4809	1-216-828-11	RES-CHIP	3.9K	5%	1/10W
R4810	1-216-801-11	RES-CHIP	22	5%	1/10W
R4811	1-216-864-11	SHORT CHIP	0		
R4812	1-216-864-11	SHORT CHIP	0		
R4813	1-216-864-11	SHORT CHIP	0		
R4816	1-216-864-11	SHORT CHIP	0		
R4912	1-218-855-11	METAL CHIP	2.2K	0.5%	1/10W
R4913	1-218-855-11	METAL CHIP	2.2K	0.5%	1/10W
R4914	1-218-855-11	METAL CHIP	2.2K	0.5%	1/10W
R4915	1-216-821-11	RES-CHIP	1K	5%	1/10W
R4916	1-216-821-11	RES-CHIP	1K	5%	1/10W
R4917	1-216-821-11	RES-CHIP	1K	5%	1/10W
R4918	1-216-833-11	RES-CHIP	10K	5%	1/10W
R4919	1-216-833-11	RES-CHIP	10K	5%	1/10W
R9239	1-216-803-11	RES-CHIP	33	5%	1/10W
R9240	1-216-803-11	RES-CHIP	33	5%	1/10W
R9242	1-216-803-11	RES-CHIP	33	5%	1/10W
R9243	1-216-803-11	RES-CHIP	33	5%	1/10W

< RESISTOR CHIP >

RB4200	1-239-409-11	NETWORK RESISTOR (CHIP)	47
RB4201	1-239-409-11	NETWORK RESISTOR (CHIP)	47
RB4202	1-239-409-11	NETWORK RESISTOR (CHIP)	47
RB4203	1-239-409-11	NETWORK RESISTOR (CHIP)	47
RB4204	1-239-409-11	NETWORK RESISTOR (CHIP)	47
RB4205	1-239-409-11	NETWORK RESISTOR (CHIP)	47
RB4206	1-239-409-11	NETWORK RESISTOR (CHIP)	47
RB4207	1-239-409-11	NETWORK RESISTOR (CHIP)	47
RB4208	1-239-409-11	NETWORK RESISTOR (CHIP)	47
RB4209	1-239-409-11	NETWORK RESISTOR (CHIP)	47
RB4210	1-239-409-11	NETWORK RESISTOR (CHIP)	47
RB4211	1-239-409-11	NETWORK RESISTOR (CHIP)	47
RB4212	1-239-409-11	NETWORK RESISTOR (CHIP)	47
RB4213	1-239-409-11	NETWORK RESISTOR (CHIP)	47
RB4214	1-239-409-11	NETWORK RESISTOR (CHIP)	47
RB4310	1-233-813-11	RES, NETWORK 150	(3216)
RB4311	1-233-813-11	RES, NETWORK 150	(3216)
RB4312	1-233-813-11	RES, NETWORK 150	(3216)
RB4313	1-233-813-11	RES, NETWORK 150	(3216)
RB4314	1-233-813-11	RES, NETWORK 150	(3216)
RB4315	1-233-813-11	RES, NETWORK 150	(3216)
RB4600	1-239-409-11	NETWORK RESISTOR (CHIP)	47
RB4601	1-239-409-11	NETWORK RESISTOR (CHIP)	47
RB4602	1-239-409-11	NETWORK RESISTOR (CHIP)	47
RB4603	1-239-409-11	NETWORK RESISTOR (CHIP)	47
RB4604	1-239-409-11	NETWORK RESISTOR (CHIP)	47
RB4605	1-239-409-11	NETWORK RESISTOR (CHIP)	47
RB4612	1-233-576-11	RES, CHIP NETWORK 100	
RB4613	1-233-576-11	RES, CHIP NETWORK 100	
RB4616	1-233-576-11	RES, CHIP NETWORK 100	
RB4617	1-233-576-11	RES, CHIP NETWORK 100	
RB4618	1-233-576-11	RES, CHIP NETWORK 100	
RB4619	1-233-576-11	RES, CHIP NETWORK 100	
RB4622	1-239-409-11	NETWORK RESISTOR (CHIP)	47
RB4623	1-233-576-11	RES, CHIP NETWORK 100	
RB4624	1-233-576-11	RES, CHIP NETWORK 100	

< CRYSTAL >

X3100	1-781-723-21	OSCILLATOR, CRYSTAL	
X3200	1-781-914-21	VIBRATOR, CRYSTAL	
X4601	1-795-112-21	VIBRATOR, CRYSTAL	

***A-1300-461-A G Board, Complete (KV-32FQ80)**
***A-1300-549-A G Board, Complete (KV-36FQ80)**

	4-382-854-01	SCREW (M3X8), P, SW (+)
	4-382-854-01	SCREW (M3X8), P, SW (+)

G Board Common Parts

< CAPACITOR >

C6001	⚠	1-137-999-11	FILM	0.1UF		275V
C6002	⚠	1-137-999-11	FILM	0.1UF		275V
C6003	⚠	1-119-899-51	CERAMIC	1000PF	10.00%	250V
C6004	⚠	1-119-899-51	CERAMIC	1000PF	10.00%	250V
C6006		1-117-753-11	ELECT(BLOCK)	470UF	20.00%	450V
C6007		1-126-964-11	ELECT	10UF	20.00%	50V
C6008		1-126-963-11	ELECT	4.7UF	20.00%	50V
C6010		1-136-165-00	FILM	0.1UF	5.00%	50V
C6011		1-162-964-11	CERAMIC CHIP	0.001UF	10.00%	50V
C6012	⚠	1-161-830-00	CERAMIC	0.0047UF		500V
C6013	⚠	1-161-830-00	CERAMIC	0.0047UF		500V
C6014		1-113-610-11	ELECT(BLOCK)	220UF	20.00%	250V
C6015		1-115-339-11	CERAMIC CHIP	0.1UF	10.00%	50V
C6016		1-161-830-00	CERAMIC	0.0047UF		500V
C6017		1-161-830-00	CERAMIC	0.0047UF		500V
C6018		1-126-949-11	ELECT	220UF	20.00%	35V
C6020		1-135-946-21	FILM	47000PF	3%	800V
C6021		1-164-645-11	CERAMIC	1000PF	10.00%	500V
C6022		1-126-963-11	ELECT	4.7UF	20.00%	50V
C6023		1-110-626-11	ELECT	330UF	20.00%	160V

Note : The components identified by shading and marked ⚠ are critical for safety. Replace only with the part numbers specified in the parts list.

G

REF.NO.	PART.NO	DESCRIPTION	REMARK
C6024	1-164-625-11	CERAMIC 680PF	10.00% 500V
C6025	1-164-625-11	CERAMIC 680PF	10.00% 500V
C6026	1-164-625-11	CERAMIC 680PF	10.00% 500V
C6027	1-164-625-11	CERAMIC 680PF	10.00% 500V
C6028	1-100-197-11	ELECT 15000UF	20% 16V
C6029	1-100-197-11	ELECT 15000UF	20% 16V
C6030	1-126-944-11	ELECT 3300UF	20.00% 25V
C6031	1-126-944-11	ELECT 3300UF	20.00% 25V
C6032 ⚠	1-113-927-11	CERAMIC 0.01UF	250V
C6033	1-162-964-11	CERAMIC CHIP 0.001UF	10.00% 50V
C6035	1-136-165-00	FILM 0.1UF	5.00% 50V
C6036	1-136-479-11	FILM 0.001UF	5.00% 100V
C6037	1-126-947-11	ELECT 47UF	20.00% 35V
C6038	1-164-645-11	CERAMIC 1000PF	10.00% 500V
C6039	1-125-891-11	CERAMIC CHIP 0.47UF	10.00% 10V
C6040	1-115-340-11	CERAMIC CHIP 0.22UF	10.00% 25V
C6045	1-115-339-11	CERAMIC CHIP 0.1UF	10.00% 50V
C6102	1-126-943-11	ELECT 2200UF	20.00% 25V
C6103	1-126-971-11	ELECT 470UF	20.00% 50V
C6105	1-126-964-11	ELECT 10UF	20.00% 50V
C6106	1-126-964-11	ELECT 10UF	20.00% 50V
		< CONNECTOR >	
CN6001 ⚠	*1-691-291-11	PIN, CONNECTOR (PC BOARD) 5P	
CN6002 ⚠	*1-508-786-00	PIN, CONNECTOR (5MM PITCH) 2P	
CN6003 ⚠	*1-508-765-00	PIN, CONNECTOR (5MM PITCH) 3P	
CN6004 ⚠	*1-691-960-11	PIN, CONNECTOR (PC BOARD) 3P	
CN6005	*1-564-509-11	PLUG, CONNECTOR 6P	
CN6006	*1-564-516-11	PLUG, CONNECTOR 13P	
CN6008	*1-564-508-11	PLUG, CONNECTOR 5P	
CN6010	*1-564-511-11	PLUG, CONNECTOR 8P	
CN6014	1-695-915-11	TAB (CONTACT)	
CN6015	1-695-915-11	TAB (CONTACT)	
		< DIODE >	
D6001	6-500-067-01	DIODE GSIB460L/45	
D6002	8-719-982-26	DIODE MTZJ-33B	
D6004	8-719-979-64	DIODE UF4005PKG23	
D6008	8-719-063-70	DIODE D1NL20U	
D6009	8-719-110-41	DIODE RD15ESB2	
D6010	8-719-085-24	DIODE FBIU4D7M1-B	
D6011	8-719-033-12	DIODE S3L40F	
D6012	8-719-033-12	DIODE S3L40F	
D6014	8-719-083-92	DIODE YG802C09RF122	
D6015	8-719-085-10	DIODE FMB-24LF654	
D6016	8-719-312-47	DIODE RBA-406B	
D6035	8-719-510-02	DIODE D1NS4	
D6036	8-719-081-97	DIODE MMDL914T1	
D6101	8-719-081-97	DIODE MMDL914T1	
D6102	8-719-511-40	DIODE S1VB40	
D6103	8-719-081-97	DIODE MMDL914T1	
D6104	8-719-081-97	DIODE MMDL914T1	
D6105	8-719-081-97	DIODE MMDL914T1	
D6106	8-719-081-97	DIODE MMDL914T1	
D6107	8-719-081-97	DIODE MMDL914T1	
		< FERRITE BEAD >	
FB6001	1-410-397-21	FERRITE 1.1UH	
FB6002	1-410-397-21	FERRITE 1.1UH	
FB6003	1-410-397-21	FERRITE 1.1UH	
FB6004	1-410-397-21	FERRITE 1.1UH	
FB6005	1-535-143-61	LEAD, JUMPER (5.0MM)	
FB6006	1-535-143-61	LEAD, JUMPER (5.0MM)	
		< IC >	
IC6001	8-759-670-30	IC MCZ3001D	
IC6003	8-749-016-19	IC SE135N-LF4	
		< COIL >	
L6001	1-406-663-21	INDUCTOR 47UH	
L6002	1-412-521-31	INDUCTOR 4.7UH	
L6003	1-412-521-31	INDUCTOR 4.7UH	
L6004	1-535-143-61	LEAD, JUMPER (5.0MM)	
L6005	1-535-143-61	LEAD, JUMPER (5.0MM)	
L6006	1-406-659-11	INDUCTOR 10UH	
L6007	1-412-525-31	INDUCTOR 10UH	
L6008	1-406-670-11	INDUCTOR 680UH	
		< PHOTOCOUPLER >	
PH6001 ⚠	8-749-016-21	IC TCET1103G	
		< TRANSISTOR >	
Q6003	8-729-010-29	TRANSISTOR MSD601-RST1	
Q6006	6-550-146-01	TRANSISTOR SPA07N60C2-E8152	
Q6007	6-550-146-01	TRANSISTOR SPA07N60C2-E8152	
Q6101	8-729-029-56	TRANSISTOR DTA144ESA	
Q6102	8-729-010-29	TRANSISTOR MSD601-RST1	
Q6103	8-729-029-56	TRANSISTOR DTA144ESA	
Q6104	8-729-010-29	TRANSISTOR MSD601-RST1	
Q6105	8-729-010-29	TRANSISTOR MSD601-RST1	
		< RESISTOR >	
JR6002	1-216-295-91	SHORT CHIP 0	
JR6004	1-216-295-91	SHORT CHIP 0	
R6003 ⚠	1-202-933-61	FUSIBLE 0.1	10% 1/2W
R6004 ⚠	1-205-998-11	CEMENTED 1	5% 10W
R6005 ⚠	1-205-998-11	CEMENTED 1	5% 10W
R6006 ⚠	1-205-998-11	CEMENTED 1	5% 10W
R6007	1-243-979-21	METAL OXIDE 0.1	5% 2W

Note : The components identified by shading and marked ⚠ are critical for safety. Replace only with the part numbers specified in the parts list.

REF.NO.	PART.NO	DESCRIPTION			REMARK
R6008	1-243-979-21	METAL OXIDE	0.1	5%	2W
R6009	1-208-810-11	METAL CHIP	15K	0.5%	1/10W
R6010	1-215-481-00	METAL	330K	1%	1/4W
R6013 ⚠	1-218-265-11	METAL	8.2M	5%	1W
R6014	1-215-926-00	METAL OXIDE	33K	5%	3W
R6015	1-208-757-11	METAL CHIP	91	0.5%	1/10W
R6021	1-216-362-11	METAL OXIDE	0.27	5%	2W
R6022	1-216-833-11	RES-CHIP	10K	5%	1/10W
R6024	1-216-615-11	METAL CHIP	33	0.5%	1/10W
R6028	1-249-389-11	CARBON	4.7	5%	1/4W
R6029	1-216-833-11	RES-CHIP	10K	5%	1/10W
R6030	1-216-817-11	RES-CHIP	470	5%	1/10W
R6032	1-249-417-11	CARBON	1K	5%	1/4W
R6033	1-215-481-00	METAL	330K	1%	1/4W
R6035	1-260-083-11	CARBON	47	5%	1/2W
R6036	1-216-817-11	RES-CHIP	470	5%	1/10W
R6037	1-249-405-11	CARBON	100	5%	1/4W
R6038	1-208-830-11	METAL CHIP	100K	0.5%	1/10W
R6039	1-208-830-11	METAL CHIP	100K	0.5%	1/10W
R6040	1-208-814-91	METAL CHIP	22K	0.5%	1/10W
R6042	1-216-295-91	SHORT CHIP	0		
R6045	1-216-639-11	METAL CHIP	330	0.5%	1/10W
R6047	1-208-842-11	METAL CHIP	330K	0.5%	1/10W
R6048	1-215-481-00	METAL	330K	1%	1/4W
R6049	1-208-805-11	METAL CHIP	9.1K	0.5%	1/10W
R6050	1-208-758-11	METAL CHIP	100	0.5%	1/10W
R6054	1-216-615-11	METAL CHIP	33	0.5%	1/10W
R6056	1-216-295-91	SHORT CHIP	0		
R6101	1-216-821-11	RES-CHIP	1K	5%	1/10W
R6102	1-216-829-11	RES-CHIP	4.7K	5%	1/10W
R6103	1-216-821-11	RES-CHIP	1K	5%	1/10W
R6104	1-216-821-11	RES-CHIP	1K	5%	1/10W
R6105	1-216-821-11	RES-CHIP	1K	5%	1/10W
R6106	1-216-829-11	RES-CHIP	4.7K	5%	1/10W
R6107	1-216-829-11	RES-CHIP	4.7K	5%	1/10W
R6108	1-216-821-11	RES-CHIP	1K	5%	1/10W
R6109	1-216-829-11	RES-CHIP	4.7K	5%	1/10W
R6110	1-216-821-11	RES-CHIP	1K	5%	1/10W
		< RELAY >			
RY6001 ⚠	1-755-395-11	RELAY (AC POWER)			
RY6002 ⚠	1-755-389-11	RELAY (AC POWER)			
		< TRANSFORMER >			
T6002 ⚠	1-437-443-11	TRANSFORMER, CONVERTER (PIT)			
T6003 ⚠	1-424-896-11	TRANSFORMER, LINE FILTER			
T6101 ⚠	1-437-483-11	TRANSFORMER, STANDBY			

REF.NO.	PART.NO	DESCRIPTION			REMARK
		< THERMISTOR >			
TH6002 ⚠	1-804-650-11	THERMISTOR, POSITIVE			

G Board Variant Parts KV-32FQ80

		< CAPACITOR >			
C6005	1-216-965-91	ELECT 22UF 20.00%			50V
		< DIODE >			
D6006	8-719-081-97	DIODE MMDL914T1			
D6007	8-719-081-97	DIODE MMDL914T1			
		< TRANSISTOR >			
Q6005	8-729-029-56	TRANSISTOR DTA144ESA			
Q6010	8-729-119-78	TRANSISTOR 2SC2785-HFE			
		< RESISTOR >			
R6016	1-216-821-11	RES-CHIP	1K	5%	1/10W
R6017	1-216-833-11	RES-CHIP	10K	5%	1/10W
R6018	1-260-131-11	CARBON	470K	5%	1/2W
R6019	1-260-130-81	CARBON	390K	5%	1/2W
R6020	1-216-820-11	RES-CHIP	820	5%	1/10W
R6057	1-208-798-11	METAL CHIP	4.7K	0.5%	1/10W

G Board Variant Parts KV-36FQ80

		< CAPACITOR >			
C6005	NOT FITTED				
		< DIODE >			
D6006	NOT FITTED				
D6007	NOT FITTED				
		< TRANSISTOR >			
Q6005	NOT FITTED				
Q6010	NOT FITTED				
		< RESISTOR >			
R6016	NOT FITTED				
R6017	NOT FITTED				
R6018	NOT FITTED				
R6019	NOT FITTED				
R6020	NOT FITTED				
R6057	NOT FITTED				

REF.NO.	PART.NO	DESCRIPTION	REMARK
*A-1300-651-A		J2 Board, Complete (KV-32FQ80B)	
*A-1300-632-A		J2 Board, Complete (KV-32FQ80E/ KV-32FQ80K)	
*A-1300-676-A		J2 Board, Complete (KV-32FQ80U)	
*A-1300-651-A		J2 Board, Complete (KV-36FQ80B)	
*A-1300-632-A		J2 Board, Complete (KV-36FQ80E/ KV-36FQ80K)	
	*4-042-408-01	PIN, COATING LEAD	

J2 Board Common Parts

< CAPACITOR >

C2300	1-107-715-11	ELECT 22UF	20.00% 50V
C2301	1-162-964-11	CERAMIC CHIP 0.001UF	10.00% 50V
C2302	1-162-964-11	CERAMIC CHIP 0.001UF	10.00% 50V
C2303	1-104-665-11	ELECT 100UF	20.00% 25V
C2304	1-104-665-11	ELECT 100UF	20.00% 25V
C2305	1-126-941-11	ELECT 470UF	20.00% 25V
C2306	1-104-665-11	ELECT 100UF	20.00% 25V
C2307	1-104-665-11	ELECT 100UF	20.00% 25V
C2308	1-107-826-11	CERAMIC CHIP 0.1UF	10.00% 16V
C2600	1-162-968-11	CERAMIC CHIP 0.0047UF	10.00% 50V
C2601	1-162-927-11	CERAMIC CHIP 100PF	5.00% 50V
C2602	1-164-346-11	CERAMIC CHIP 1UF	16V
C2603	1-162-968-11	CERAMIC CHIP 0.0047UF	10.00% 50V
C2604	1-162-927-11	CERAMIC CHIP 100PF	5.00% 50V
C2605	1-164-346-11	CERAMIC CHIP 1UF	16V
C2625	1-162-968-11	CERAMIC CHIP 0.0047UF	10.00% 50V
C2626	1-126-947-11	ELECT 47UF	20.00% 35V
C2627	1-162-927-11	CERAMIC CHIP 100PF	5.00% 50V
C2628	1-164-346-11	CERAMIC CHIP 1UF	16V
C2629	1-162-968-11	CERAMIC CHIP 0.0047UF	10.00% 50V
C2630	1-126-947-11	ELECT 47UF	20.00% 35V
C2631	1-162-927-11	CERAMIC CHIP 100PF	5.00% 50V
C2632	1-164-346-11	CERAMIC CHIP 1UF	16V
C2650	1-162-968-11	CERAMIC CHIP 0.0047UF	10.00% 50V
C2651	1-162-927-11	CERAMIC CHIP 100PF	5.00% 50V
C2652	1-126-947-11	ELECT 47UF	20.00% 35V
C2653	1-164-346-11	CERAMIC CHIP 1UF	16V
C2654	1-162-968-11	CERAMIC CHIP 0.0047UF	10.00% 50V
C2655	1-126-947-11	ELECT 47UF	20.00% 35V
C2656	1-162-927-11	CERAMIC CHIP 100PF	5.00% 50V
C2657	1-164-346-11	CERAMIC CHIP 1UF	16V
C2675	1-162-927-11	CERAMIC CHIP 100PF	5.00% 50V
C2676	1-164-346-11	CERAMIC CHIP 1UF	16V
C2677	1-162-927-11	CERAMIC CHIP 100PF	5.00% 50V
C2678	1-164-346-11	CERAMIC CHIP 1UF	16V
C2700	1-162-927-11	CERAMIC CHIP 100PF	5.00% 50V
C2701	1-164-346-11	CERAMIC CHIP 1UF	16V
C2702	1-162-927-11	CERAMIC CHIP 100PF	5.00% 50V
C2703	1-164-346-11	CERAMIC CHIP 1UF	16V
C2705	1-162-970-11	CERAMIC CHIP 0.01UF	10.00% 25V
C2706	1-104-665-11	ELECT 100UF	20.00% 25V
C2707	1-104-665-11	ELECT 100UF	20.00% 25V
C2708	1-104-665-11	ELECT 100UF	20.00% 25V
C2709	1-104-665-11	ELECT 100UF	20.00% 25V
C2710	1-162-970-11	CERAMIC CHIP 0.01UF	10.00% 25V
C3100	1-127-715-91	CERAMIC CHIP 0.22UF	10% 16V
C3101	1-104-665-11	ELECT 100UF	20.00% 25V
C3102	1-127-715-91	CERAMIC CHIP 0.22UF	10% 16V
C3103	1-104-665-11	ELECT 100UF	20.00% 25V
C3105	1-127-715-91	CERAMIC CHIP 0.22UF	10% 16V
C3106	1-104-665-11	ELECT 100UF	20.00% 25V
C3107	1-127-715-91	CERAMIC CHIP 0.22UF	10% 16V
C3108	1-104-665-11	ELECT 100UF	20.00% 25V
C3110	1-127-715-91	CERAMIC CHIP 0.22UF	10% 16V
C3111	1-104-665-11	ELECT 100UF	20.00% 25V
C3300	1-126-947-11	ELECT 47UF	20.00% 35V
C3301	1-162-970-11	CERAMIC CHIP 0.01UF	10.00% 25V
C3302	1-107-826-11	CERAMIC CHIP 0.1UF	10.00% 16V
C3304	1-107-826-11	CERAMIC CHIP 0.1UF	10.00% 16V
C3305	1-164-346-11	CERAMIC CHIP 1UF	16V
C3309	1-104-665-11	ELECT 100UF	20.00% 25V
C3310	1-104-665-11	ELECT 100UF	20.00% 25V
C3313	1-165-908-91	CERAMIC CHIP 1UF	10% 10V
C3314	1-107-826-11	CERAMIC CHIP 0.1UF	10.00% 16V
C3315	1-126-964-11	ELECT 10UF	20.00% 50V
C3317	1-107-826-11	CERAMIC CHIP 0.1UF	10.00% 16V
C3318	1-165-908-91	CERAMIC CHIP 1UF	10% 10V
C3319	1-107-826-11	CERAMIC CHIP 0.1UF	10.00% 16V
C3320	1-165-908-91	CERAMIC CHIP 1UF	10% 10V
C3321	1-107-826-11	CERAMIC CHIP 0.1UF	10.00% 16V
C3322	1-162-915-11	CERAMIC CHIP 10PF	0.50PF 50V
C3323	1-162-927-11	CERAMIC CHIP 100PF	5.00% 50V
C3324	1-162-915-11	CERAMIC CHIP 10PF	0.50PF 50V
C3325	1-162-927-11	CERAMIC CHIP 100PF	5.00% 50V
C3327	1-107-826-11	CERAMIC CHIP 0.1UF	10.00% 16V
C3328	1-164-346-11	CERAMIC CHIP 1UF	16V
C3330	1-164-346-11	CERAMIC CHIP 1UF	16V
C3331	1-164-346-11	CERAMIC CHIP 1UF	16V
C3332	1-107-826-11	CERAMIC CHIP 0.1UF	10.00% 16V
C3333	1-107-826-11	CERAMIC CHIP 0.1UF	10.00% 16V
C3334	1-126-964-11	ELECT 10UF	20.00% 50V
C3335	1-126-947-11	ELECT 47UF	20.00% 35V
C3336	1-107-826-11	CERAMIC CHIP 0.1UF	10.00% 16V
C3337	1-165-908-91	CERAMIC CHIP 1UF	10% 10V
C3338	1-164-346-11	CERAMIC CHIP 1UF	16V
C3339	1-164-346-11	CERAMIC CHIP 1UF	16V
C3340	1-104-665-11	ELECT 100UF	20.00% 25V
C3341	1-162-970-11	CERAMIC CHIP 0.01UF	10.00% 25V
C3342	1-104-665-11	ELECT 100UF	20.00% 25V

REF.NO.	PART.NO	DESCRIPTION	REMARK
C3343	1-162-970-11	CERAMIC CHIP 0.01UF	10.00% 25V
C3344	1-104-665-11	ELECT 100UF	20.00% 25V
C3345	1-162-970-11	CERAMIC CHIP 0.01UF	10.00% 25V
C3400	1-126-947-11	ELECT 47UF	20.00% 35V
C3401	1-107-826-11	CERAMIC CHIP 0.1UF	10.00% 16V
C3402	1-126-947-11	ELECT 47UF	20.00% 35V
C3403	1-107-826-11	CERAMIC CHIP 0.1UF	10.00% 16V
C3404	1-164-156-11	CERAMIC CHIP 0.1UF	25V
C3406	1-126-964-11	ELECT 10UF	20.00% 50V
C3407	1-126-964-11	ELECT 10UF	20.00% 50V
C3408	1-107-826-11	CERAMIC CHIP 0.1UF	10.00% 16V
C3410	1-126-941-11	ELECT 470UF	20.00% 25V
C3411	1-164-156-11	CERAMIC CHIP 0.1UF	25V
C3412	1-126-968-11	ELECT 100UF	20.00% 50V
C3413	1-164-346-11	CERAMIC CHIP 1UF	16V
C3414	1-164-346-11	CERAMIC CHIP 1UF	16V
C3415	1-164-346-11	CERAMIC CHIP 1UF	16V
C3416	1-164-346-11	CERAMIC CHIP 1UF	16V
C3417	1-164-346-11	CERAMIC CHIP 1UF	16V
C3418	1-164-346-11	CERAMIC CHIP 1UF	16V
C3419	1-104-665-11	ELECT 100UF	20.00% 25V
C3420	1-104-665-11	ELECT 100UF	20.00% 25V
C3421	1-104-665-11	ELECT 100UF	20.00% 25V
C3450	1-164-004-11	CERAMIC CHIP 0.1UF	10.00% 25V
C3451	1-126-933-11	ELECT 100UF	20.00% 16V
C3500	1-126-947-11	ELECT 47UF	20.00% 35V
C3501	1-107-826-11	CERAMIC CHIP 0.1UF	10.00% 16V
C3502	1-165-176-11	CERAMIC CHIP 0.047UF	10.00% 16V
C3503	1-165-176-11	CERAMIC CHIP 0.047UF	10.00% 16V
C3504	1-165-176-11	CERAMIC CHIP 0.047UF	10.00% 16V
C3505	1-165-176-11	CERAMIC CHIP 0.047UF	10.00% 16V
C3506	1-165-176-11	CERAMIC CHIP 0.047UF	10.00% 16V
C3507	1-165-176-11	CERAMIC CHIP 0.047UF	10.00% 16V
C3600	1-104-665-11	ELECT 100UF	20.00% 25V
C3601	1-127-715-91	CERAMIC CHIP 0.22UF	10% 16V
C3616	1-165-908-91	CERAMIC CHIP 1UF	10% 10V
C3631	1-165-908-91	CERAMIC CHIP 1UF	10% 10V
C3650	1-107-826-11	CERAMIC CHIP 0.1UF	10.00% 16V
C3653	1-126-964-11	ELECT 10UF	20.00% 50V
C3675	1-107-826-11	CERAMIC CHIP 0.1UF	10.00% 16V
C3676	1-104-665-11	ELECT 100UF	20.00% 25V
C3677	1-162-964-11	CERAMIC CHIP 0.001UF	10.00% 50V
C3678	1-162-964-11	CERAMIC CHIP 0.001UF	10.00% 50V
C3679	1-107-826-11	CERAMIC CHIP 0.1UF	10.00% 16V
C3804	1-163-017-00	CERAMIC CHIP 0.0047UF	10.00% 50V
C3806	1-162-970-11	CERAMIC CHIP 0.01UF	10.00% 25V
C3807	1-104-666-11	ELECT 220UF	20.00% 25V
C3814	1-104-665-11	ELECT 100UF	20.00% 25V
C3815	1-162-970-11	CERAMIC CHIP 0.01UF	10.00% 25V

REF.NO.	PART.NO	DESCRIPTION	REMARK
		< CONNECTOR >	
CN1001	1-793-498-11	CONNECTOR BOARD TO BOARD 50P	
CN3800	1-695-915-11	TAB (CONTACT)	
		< DIODE >	
D2300	8-719-083-57	DIODE UDZSTE-173.6B	
D2600	8-719-083-82	DIODE UDZS-TE17-12B	
D2602	8-719-083-82	DIODE UDZS-TE17-12B	
D2626	8-719-083-82	DIODE UDZS-TE17-12B	
D2628	8-719-083-82	DIODE UDZS-TE17-12B	
D2650	8-719-083-82	DIODE UDZS-TE17-12B	
D2651	8-719-083-82	DIODE UDZS-TE17-12B	
D2652	8-719-083-82	DIODE UDZS-TE17-12B	
D2653	8-719-083-82	DIODE UDZS-TE17-12B	
D2675	8-719-083-82	DIODE UDZS-TE17-12B	
D2676	8-719-083-82	DIODE UDZS-TE17-12B	
D2700	8-719-083-82	DIODE UDZS-TE17-12B	
D2701	8-719-083-82	DIODE UDZS-TE17-12B	
D3600	8-719-083-82	DIODE UDZS-TE17-12B	
D3601	8-719-083-82	DIODE UDZS-TE17-12B	
D3602	8-719-083-82	DIODE UDZS-TE17-12B	
D3603	8-719-083-82	DIODE UDZS-TE17-12B	
D3604	8-719-083-82	DIODE UDZS-TE17-12B	
D3605	8-719-083-82	DIODE UDZS-TE17-12B	
D3606	8-719-083-82	DIODE UDZS-TE17-12B	
D3625	8-719-083-82	DIODE UDZS-TE17-12B	
D3626	8-719-083-82	DIODE UDZS-TE17-12B	
D3627	8-719-083-82	DIODE UDZS-TE17-12B	
D3628	8-719-083-82	DIODE UDZS-TE17-12B	
D3629	8-719-083-82	DIODE UDZS-TE17-12B	
D3630	8-719-083-82	DIODE UDZS-TE17-12B	
D3631	8-719-083-82	DIODE UDZS-TE17-12B	
D3650	8-719-083-82	DIODE UDZS-TE17-12B	
D3651	8-719-083-82	DIODE UDZS-TE17-12B	
D3652	8-719-083-82	DIODE UDZS-TE17-12B	
D3653	8-719-083-82	DIODE UDZS-TE17-12B	
D3654	8-719-083-82	DIODE UDZS-TE17-12B	
D3675	8-719-083-82	DIODE UDZS-TE17-12B	
D3676	8-719-083-82	DIODE UDZS-TE17-12B	
D3677	8-719-083-82	DIODE UDZS-TE17-12B	
D3700	8-719-083-82	DIODE UDZS-TE17-12B	
D3701	8-719-083-82	DIODE UDZS-TE17-12B	
D3702	8-719-056-84	DIODE UDZ-TE-17-7.5B	
		< FERRITE BEAD >	
FB3801	1-414-766-22	FERRITE 0UH	
FB3802	1-414-766-22	FERRITE 0UH	

REF.NO.	PART.NO	DESCRIPTION	REMARK
	< FILTER >		
FL3300	1-236-071-11	ENCAPSULATED COMPONENT	
FL3301	1-236-071-11	ENCAPSULATED COMPONENT	
FL3400	1-236-071-11	ENCAPSULATED COMPONENT	
FL3500	1-236-071-11	ENCAPSULATED COMPONENT	
	< IC >		
IC2300	8-759-576-76	IC TDA2822D013TR	
IC3300	8-752-096-83	IC CXA2149AQ-TL	
IC3400	8-752-068-45	IC CXA1855Q	
IC3500	8-759-587-03	IC TDA8601T	
	< SOCKET >		
J2300	1-770-989-11	JACK, PIN 2P	
	< COIL >		
L3305	1-414-934-21	INDUCTOR 10UH	
L3306	1-414-934-21	INDUCTOR 10UH	
L3307	1-414-934-21	INDUCTOR 10UH	
L3308	1-414-934-21	INDUCTOR 10UH	
L3309	1-414-934-21	INDUCTOR 10UH	
L3800	1-414-934-21	INDUCTOR 10UH	
L3801	1-412-979-21	INDUCTOR 1UH	
L3802	1-412-979-21	INDUCTOR 1UH	
L3803	1-414-934-21	INDUCTOR 10UH	
	< TRANSISTOR >		
Q2300	8-729-120-28	TRANSISTOR 2SC1623-L5L6	
Q2301	8-729-120-28	TRANSISTOR 2SC1623-L5L6	
Q2302	8-729-120-28	TRANSISTOR 2SC1623-L5L6	
Q2303	8-729-120-28	TRANSISTOR 2SC1623-L5L6	
Q2625	8-729-901-81	TRANSISTOR 2SC2412K-T-146-R	
Q2626	8-729-901-81	TRANSISTOR 2SC2412K-T-146-R	
Q3300	8-729-901-81	TRANSISTOR 2SC2412K-T-146-R	
Q3301	8-729-901-81	TRANSISTOR 2SC2412K-T-146-R	
Q3302	8-729-901-81	TRANSISTOR 2SC2412K-T-146-R	
Q3303	8-729-901-81	TRANSISTOR 2SC2412K-T-146-R	
Q3304	8-729-901-81	TRANSISTOR 2SC2412K-T-146-R	
Q3305	8-729-038-96	TRANSISTOR IMZ1A-T109	
Q3306	8-729-038-96	TRANSISTOR IMZ1A-T109	
Q3310	8-729-038-96	TRANSISTOR IMZ1A-T109	
Q3311	8-729-038-96	TRANSISTOR IMZ1A-T109	
Q3312	8-729-038-96	TRANSISTOR IMZ1A-T109	
Q3400	8-729-901-81	TRANSISTOR 2SC2412K-T-146-R	
Q3401	8-729-901-81	TRANSISTOR 2SC2412K-T-146-R	
Q3402	8-729-026-49	TRANSISTOR 2SA1037AK-T146-R	
Q3403	8-729-901-81	TRANSISTOR 2SC2412K-T-146-R	
Q3404	8-729-026-49	TRANSISTOR 2SA1037AK-T146-R	
Q3405	8-729-901-81	TRANSISTOR 2SC2412K-T-146-R	
Q3406	8-729-901-81	TRANSISTOR 2SC2412K-T-146-R	
Q3407	8-729-901-81	TRANSISTOR 2SC2412K-T-146-R	
Q3410	8-729-901-81	TRANSISTOR 2SC2412K-T-146-R	
Q3600	8-729-901-81	TRANSISTOR 2SC2412K-T-146-R	
Q3625	8-729-901-81	TRANSISTOR 2SC2412K-T-146-R	
Q3650	8-729-901-81	TRANSISTOR 2SC2412K-T-146-R	
Q3651	8-729-901-81	TRANSISTOR 2SC2412K-T-146-R	
Q3652	8-729-901-81	TRANSISTOR 2SC2412K-T-146-R	
Q3806	8-729-120-28	TRANSISTOR 2SC1623-L5L6	
Q3807	8-729-026-49	TRANSISTOR 2SA1037AK-T146-R	
	< RESISTOR >		
R2301	1-216-817-11	RES-CHIP 470 5% 1/10W	
R2303	1-216-817-11	RES-CHIP 470 5% 1/10W	
R2304	1-216-819-11	RES-CHIP 680 5% 1/10W	
R2305	1-216-819-11	RES-CHIP 680 5% 1/10W	
R2306	1-216-029-00	RES-CHIP 150 5% 1/10W	
R2307	1-216-029-00	RES-CHIP 150 5% 1/10W	
R2308	1-216-029-00	RES-CHIP 150 5% 1/10W	
R2309	1-216-029-00	RES-CHIP 150 5% 1/10W	
R2310	1-216-825-11	RES-CHIP 2.2K 5% 1/10W	
R2311	1-216-825-11	RES-CHIP 2.2K 5% 1/10W	
R2312	1-249-389-11	CARBON 4.7 5% 1/4W	
R2313	1-249-389-11	CARBON 4.7 5% 1/4W	
R2314	1-216-813-11	RES-CHIP 220 5% 1/10W	
R2315	1-216-813-11	RES-CHIP 220 5% 1/10W	
R2316	1-216-837-11	RES-CHIP 22K 5% 1/10W	
R2317	1-216-837-11	RES-CHIP 22K 5% 1/10W	
R2321	1-216-864-11	SHORT CHIP 0	
R2325	1-216-864-11	SHORT CHIP 0	
R2331	1-216-864-11	SHORT CHIP 0	
R2600	1-216-817-11	RES-CHIP 470 5% 1/10W	
R2601	1-216-841-11	RES-CHIP 47K 5% 1/10W	
R2602	1-216-813-11	RES-CHIP 220 5% 1/10W	
R2603	1-216-821-11	RES-CHIP 1K 5% 1/10W	
R2604	1-216-853-11	RES-CHIP 470K 5% 1/10W	
R2605	1-216-825-11	RES-CHIP 2.2K 5% 1/10W	
R2606	1-216-817-11	RES-CHIP 470 5% 1/10W	
R2607	1-216-841-11	RES-CHIP 47K 5% 1/10W	
R2608	1-216-813-11	RES-CHIP 220 5% 1/10W	
R2609	1-216-821-11	RES-CHIP 1K 5% 1/10W	
R2610	1-216-853-11	RES-CHIP 470K 5% 1/10W	
R2611	1-216-825-11	RES-CHIP 2.2K 5% 1/10W	
R2625	1-216-817-11	RES-CHIP 470 5% 1/10W	
R2626	1-216-841-11	RES-CHIP 47K 5% 1/10W	
R2627	1-216-813-11	RES-CHIP 220 5% 1/10W	
R2628	1-216-829-11	RES-CHIP 4.7K 5% 1/10W	
R2629	1-216-821-11	RES-CHIP 1K 5% 1/10W	
R2630	1-216-853-11	RES-CHIP 470K 5% 1/10W	
R2631	1-216-825-11	RES-CHIP 2.2K 5% 1/10W	

REF.NO.	PART.NO	DESCRIPTION			REMARK
R2632	1-216-817-11	RES-CHIP	470	5%	1/10W
R2633	1-216-841-11	RES-CHIP	47K	5%	1/10W
R2634	1-216-813-11	RES-CHIP	220	5%	1/10W
R2635	1-216-829-11	RES-CHIP	4.7K	5%	1/10W
R2636	1-216-821-11	RES-CHIP	1K	5%	1/10W
R2637	1-216-853-11	RES-CHIP	470K	5%	1/10W
R2638	1-216-825-11	RES-CHIP	2.2K	5%	1/10W
R2650	1-216-817-11	RES-CHIP	470	5%	1/10W
R2651	1-216-841-11	RES-CHIP	47K	5%	1/10W
R2652	1-216-813-11	RES-CHIP	220	5%	1/10W
R2654	1-216-821-11	RES-CHIP	1K	5%	1/10W
R2655	1-216-853-11	RES-CHIP	470K	5%	1/10W
R2656	1-216-827-11	RES-CHIP	3.3K	5%	1/10W
R2658	1-216-817-11	RES-CHIP	470	5%	1/10W
R2659	1-216-841-11	RES-CHIP	47K	5%	1/10W
R2660	1-216-813-11	RES-CHIP	220	5%	1/10W
R2661	1-216-821-11	RES-CHIP	1K	5%	1/10W
R2662	1-216-853-11	RES-CHIP	470K	5%	1/10W
R2663	1-216-827-11	RES-CHIP	3.3K	5%	1/10W
R2675	1-216-821-11	RES-CHIP	1K	5%	1/10W
R2676	1-216-853-11	RES-CHIP	470K	5%	1/10W
R2677	1-216-827-11	RES-CHIP	3.3K	5%	1/10W
R2679	1-216-821-11	RES-CHIP	1K	5%	1/10W
R2680	1-216-853-11	RES-CHIP	470K	5%	1/10W
R2681	1-216-827-11	RES-CHIP	3.3K	5%	1/10W
R2700	1-216-821-11	RES-CHIP	1K	5%	1/10W
R2701	1-216-825-11	RES-CHIP	2.2K	5%	1/10W
R2702	1-216-853-11	RES-CHIP	470K	5%	1/10W
R2703	1-216-821-11	RES-CHIP	1K	5%	1/10W
R2704	1-216-825-11	RES-CHIP	2.2K	5%	1/10W
R2705	1-216-853-11	RES-CHIP	470K	5%	1/10W
R3101	1-216-864-11	SHORT CHIP	0		
R3103	1-216-817-11	RES-CHIP	470	5%	1/10W
R3104	1-216-817-11	RES-CHIP	470	5%	1/10W
R3105	1-216-817-11	RES-CHIP	470	5%	1/10W
R3106	1-216-843-11	RES-CHIP	68K	5%	1/10W
R3107	1-218-725-11	METAL CHIP	24K	0.5%	1/16W
R3108	1-216-864-11	SHORT CHIP	0		
R3109	1-216-817-11	RES-CHIP	470	5%	1/10W
R3110	1-216-817-11	RES-CHIP	470	5%	1/10W
R3111	1-216-817-11	RES-CHIP	470	5%	1/10W
R3112	1-216-842-11	RES-CHIP	56K	5%	1/10W
R3113	1-218-725-11	METAL CHIP	24K	0.5%	1/16W
R3121	1-216-821-11	RES-CHIP	1K	5%	1/10W
R3122	1-216-864-11	SHORT CHIP	0		
R3123	1-216-817-11	RES-CHIP	470	5%	1/10W
R3124	1-216-817-11	RES-CHIP	470	5%	1/10W
R3125	1-216-843-11	RES-CHIP	68K	5%	1/10W
R3126	1-218-725-11	METAL CHIP	24K	0.5%	1/16W
R3127	1-216-821-11	RES-CHIP	1K	5%	1/10W
R3128	1-216-864-11	SHORT CHIP	0		
R3129	1-216-817-11	RES-CHIP	470	5%	1/10W
R3130	1-216-817-11	RES-CHIP	470	5%	1/10W
R3131	1-218-725-11	METAL CHIP	24K	0.5%	1/16W
R3132	1-216-843-11	RES-CHIP	68K	5%	1/10W
R3133	1-216-821-11	RES-CHIP	1K	5%	1/10W
R3134	1-216-864-11	SHORT CHIP	0		
R3135	1-216-817-11	RES-CHIP	470	5%	1/10W
R3136	1-216-817-11	RES-CHIP	470	5%	1/10W
R3137	1-216-843-11	RES-CHIP	68K	5%	1/10W
R3138	1-218-725-11	METAL CHIP	24K	0.5%	1/16W
R3143	1-216-813-11	RES-CHIP	220	5%	1/10W
R3144	1-216-813-11	RES-CHIP	220	5%	1/10W
R3145	1-216-813-11	RES-CHIP	220	5%	1/10W
R3146	1-216-813-11	RES-CHIP	220	5%	1/10W
R3147	1-216-813-11	RES-CHIP	220	5%	1/10W
R3300	1-218-827-11	METAL CHIP	150	0.5%	1/10W
R3301	1-218-827-11	METAL CHIP	150	0.5%	1/10W
R3305	1-216-839-11	RES-CHIP	33K	5%	1/10W
R3306	1-216-841-11	RES-CHIP	47K	5%	1/10W
R3307	1-216-817-11	RES-CHIP	470	5%	1/10W
R3308	1-216-830-11	RES-CHIP	5.6K	5%	1/10W
R3309	1-216-818-11	RES-CHIP	560	5%	1/10W
R3310	1-216-839-11	RES-CHIP	33K	5%	1/10W
R3311	1-216-841-11	RES-CHIP	47K	5%	1/10W
R3313	1-216-817-11	RES-CHIP	470	5%	1/10W
R3314	1-216-818-11	RES-CHIP	560	5%	1/10W
R3315	1-216-830-11	RES-CHIP	5.6K	5%	1/10W
R3317	1-216-843-11	RES-CHIP	68K	5%	1/10W
R3318	1-216-843-11	RES-CHIP	68K	5%	1/10W
R3319	1-218-885-11	METAL CHIP	39K	0.5%	1/10W
R3320	1-218-686-11	METAL CHIP	560	0.5%	1/16W
R3321	1-218-686-11	METAL CHIP	560	0.5%	1/16W
R3323	1-216-809-11	RES-CHIP	100	5%	1/10W
R3324	1-216-809-11	RES-CHIP	100	5%	1/10W
R3326	1-216-864-11	SHORT CHIP	0		
R3329	1-216-805-11	RES-CHIP	47	5%	1/10W
R3330	1-216-805-11	RES-CHIP	47	5%	1/10W
R3331	1-216-805-11	RES-CHIP	47	5%	1/10W
R3332	1-216-805-11	RES-CHIP	47	5%	1/10W
R3333	1-216-825-11	RES-CHIP	2.2K	5%	1/10W
R3335	1-216-864-11	SHORT CHIP	0		
R3338	1-216-864-11	SHORT CHIP	0		
R3340	1-216-864-11	SHORT CHIP	0		
R3341	1-216-825-11	RES-CHIP	2.2K	5%	1/10W
R3400	1-216-809-11	RES-CHIP	100	5%	1/10W
R3401	1-216-809-11	RES-CHIP	100	5%	1/10W
R3402	1-218-827-11	METAL CHIP	150	0.5%	1/10W
R3403	1-218-827-11	METAL CHIP	150	0.5%	1/10W
R3405	1-216-817-11	RES-CHIP	470	5%	1/10W

REF.NO.	PART.NO	DESCRIPTION			REMARK
R3406	1-216-819-11	RES-CHIP	680	5%	1/10W
R3407	1-216-809-11	RES-CHIP	100	5%	1/10W
R3408	1-216-837-11	RES-CHIP	22K	5%	1/10W
R3410	1-216-821-11	RES-CHIP	1K	5%	1/10W
R3411	1-216-809-11	RES-CHIP	100	5%	1/10W
R3412	1-216-821-11	RES-CHIP	1K	5%	1/10W
R3413	1-216-835-11	RES-CHIP	15K	5%	1/10W
R3414	1-216-817-11	RES-CHIP	470	5%	1/10W
R3415	1-216-817-11	RES-CHIP	470	5%	1/10W
R3416	1-216-825-11	RES-CHIP	2.2K	5%	1/10W
R3417	1-216-864-11	SHORT CHIP	0		
R3419	1-218-827-11	METAL CHIP	150	0.5%	1/10W
R3420	1-216-839-11	RES-CHIP	33K	5%	1/10W
R3421	1-216-841-11	RES-CHIP	47K	5%	1/10W
R3422	1-216-839-11	RES-CHIP	33K	5%	1/10W
R3423	1-216-841-11	RES-CHIP	47K	5%	1/10W
R3456	1-216-825-11	RES-CHIP	2.2K	5%	1/10W
R3460	1-218-871-11	METAL CHIP	10K	0.5%	1/10W
R3461	1-216-809-11	RES-CHIP	100	5%	1/10W
R3462	1-216-864-11	SHORT CHIP	0		
R3463	1-218-871-11	METAL CHIP	10K	0.5%	1/10W
R3500	1-216-833-11	RES-CHIP	10K	5%	1/10W
R3501	1-216-805-11	RES-CHIP	47	5%	1/10W
R3502	1-216-805-11	RES-CHIP	47	5%	1/10W
R3503	1-216-805-11	RES-CHIP	47	5%	1/10W
R3504	1-216-805-11	RES-CHIP	47	5%	1/10W
R3600	1-216-022-00	RES-CHIP	75	5%	1/10W
R3601	1-216-805-11	RES-CHIP	47	5%	1/10W
R3602	1-216-809-11	RES-CHIP	100	5%	1/10W
R3603	1-216-833-11	RES-CHIP	10K	5%	1/10W
R3604	1-216-022-00	RES-CHIP	75	5%	1/10W
R3605	1-216-805-11	RES-CHIP	47	5%	1/10W
R3606	1-216-022-00	RES-CHIP	75	5%	1/10W
R3607	1-216-805-11	RES-CHIP	47	5%	1/10W
R3608	1-216-022-00	RES-CHIP	75	5%	1/10W
R3609	1-216-805-11	RES-CHIP	47	5%	1/10W
R3610	1-216-022-00	RES-CHIP	75	5%	1/10W
R3611	1-216-841-11	RES-CHIP	47K	5%	1/10W
R3612	1-216-836-11	RES-CHIP	18K	5%	1/10W
R3613	1-216-825-11	RES-CHIP	2.2K	5%	1/10W
R3614	1-216-022-00	RES-CHIP	75	5%	1/10W
R3615	1-216-017-91	RES-CHIP	47	5%	1/10W
R3625	1-216-022-00	RES-CHIP	75	5%	1/10W
R3626	1-216-805-11	RES-CHIP	47	5%	1/10W
R3627	1-216-809-11	RES-CHIP	100	5%	1/10W
R3628	1-216-833-11	RES-CHIP	10K	5%	1/10W
R3629	1-216-022-00	RES-CHIP	75	5%	1/10W
R3630	1-216-805-11	RES-CHIP	47	5%	1/10W
R3631	1-216-022-00	RES-CHIP	75	5%	1/10W
R3632	1-216-805-11	RES-CHIP	47	5%	1/10W
R3633	1-216-022-00	RES-CHIP	75	5%	1/10W
R3634	1-216-805-11	RES-CHIP	47	5%	1/10W
R3635	1-216-022-00	RES-CHIP	75	5%	1/10W
R3636	1-218-827-11	METAL CHIP	150	0.5%	1/10W
R3638	1-218-827-11	METAL CHIP	150	0.5%	1/10W
R3639	1-216-022-00	RES-CHIP	75	5%	1/10W
R3640	1-216-017-91	RES-CHIP	47	5%	1/10W
R3650	1-216-809-11	RES-CHIP	100	5%	1/10W
R3651	1-216-833-11	RES-CHIP	10K	5%	1/10W
R3652	1-216-801-11	RES-CHIP	22	5%	1/10W
R3653	1-216-022-00	RES-CHIP	75	5%	1/10W
R3654	1-216-805-11	RES-CHIP	47	5%	1/10W
R3656	1-216-022-00	RES-CHIP	75	5%	1/10W
R3659	1-216-825-11	RES-CHIP	2.2K	5%	1/10W
R3660	1-216-022-00	RES-CHIP	75	5%	1/10W
R3661	1-216-017-91	RES-CHIP	47	5%	1/10W
R3675	1-216-809-11	RES-CHIP	100	5%	1/10W
R3676	1-216-833-11	RES-CHIP	10K	5%	1/10W
R3677	1-216-022-00	RES-CHIP	75	5%	1/10W
R3678	1-216-805-11	RES-CHIP	47	5%	1/10W
R3679	1-216-022-00	RES-CHIP	75	5%	1/10W
R3680	1-216-017-91	RES-CHIP	47	5%	1/10W
R3681	1-216-841-11	RES-CHIP	47K	5%	1/10W
R3682	1-216-836-11	RES-CHIP	18K	5%	1/10W
R3700	1-216-022-00	RES-CHIP	75	5%	1/10W
R3701	1-216-805-11	RES-CHIP	47	5%	1/10W
R3702	1-216-864-11	SHORT CHIP	0		
R3703	1-216-022-00	RES-CHIP	75	5%	1/10W
R3704	1-216-805-11	RES-CHIP	47	5%	1/10W
R3705	1-216-295-91	SHORT CHIP	0		
R3714	1-216-864-11	SHORT CHIP	0		
R3716	1-218-827-11	METAL CHIP	150	0.5%	1/10W
R3808	1-216-864-11	SHORT CHIP	0		
R3810	1-216-864-11	SHORT CHIP	0		
R3817	1-216-833-11	RES-CHIP	10K	5%	1/10W
R3821	1-216-809-11	RES-CHIP	100	5%	1/10W
R3822	1-216-817-11	RES-CHIP	470	5%	1/10W
R3823	1-216-817-11	RES-CHIP	470	5%	1/10W
R3825	1-216-817-11	RES-CHIP	470	5%	1/10W
R3826	1-216-821-11	RES-CHIP	1K	5%	1/10W
R3827	1-216-864-11	SHORT CHIP	0		
R3846	1-216-864-11	SHORT CHIP	0		
R3847	1-216-833-11	RES-CHIP	10K	5%	1/10W
R3848	1-216-825-11	RES-CHIP	2.2K	5%	1/10W
R3849	1-216-845-11	RES-CHIP	100K	5%	1/10W
R3850	1-216-821-11	RES-CHIP	1K	5%	1/10W
R3851	1-216-841-11	RES-CHIP	47K	5%	1/10W
R3852	1-216-841-11	RES-CHIP	47K	5%	1/10W
R3853	1-218-827-11	METAL CHIP	150	0.5%	1/10W
R3854	1-218-827-11	METAL CHIP	150	0.5%	1/10W

REF.NO.	PART.NO	DESCRIPTION			REMARK
R3855	1-218-827-11	METAL CHIP	150	0.5%	1/10W
R3856	1-218-827-11	METAL CHIP	150	0.5%	1/10W
R3857	1-218-827-11	METAL CHIP	150	0.5%	1/10W
R3858	1-218-827-11	METAL CHIP	150	0.5%	1/10W
R3864	1-216-864-11	SHORT CHIP	0		
R3865	1-216-864-11	SHORT CHIP	0		
R3867	1-216-817-11	RES-CHIP	470	5%	1/10W
R3868	1-216-817-11	RES-CHIP	470	5%	1/10W
R3869	1-216-817-11	RES-CHIP	470	5%	1/10W
R3870	1-216-817-11	RES-CHIP	470	5%	1/10W

J2 Board Variant Parts KV-32FQ80B/36FQ80B

< CONNECTOR >

CN3600	1-816-666-11	CONNECTOR, RGB 21P	

< TUNER >

TU3800	8-598-536-20	FRONTEND BTF-EF412	

J2 Board Variant Parts KV-32FQ80E/32FQ80K/ KV-36FQ80E/36FQ80K

< CONNECTOR >

CN3600	1-815-673-11	CONNECTOR, RGB 21P	

< TUNER >

TU3800	8-598-534-10	FRONTEND BTF-EC412	

J2 Board Variant Parts KV-32FQ80U

< CONNECTOR >

CN3600	1-815-673-11	CONNECTOR, RGB 21P	

< TUNER >

TU3800	8-598-530-10	FRONTEND BTF-EU612	

*A-1304-241-A MS2 Board, Complete

	*4-396-124-01	HOLDER (E), LED	

< CAPACITOR >

C405	1-164-156-11	CERAMIC CHIP 0.1UF		25V
C406	1-163-021-91	CERAMIC CHIP 0.01UF	10.00%	50V
C408	1-124-779-00	ELECT CHIP 10UF	20.00%	16V
C409	1-164-156-11	CERAMIC CHIP 0.1UF		25V
C410	1-163-021-91	CERAMIC CHIP 0.01UF	10.00%	50V
C412	1-164-156-11	CERAMIC CHIP 0.1UF		25V
C413	1-126-390-11	ELECT CHIP 22UF	20.00%	6.3V
C414	1-107-826-11	CERAMIC CHIP 0.1UF	10.00%	16V
C415	1-107-826-11	CERAMIC CHIP 0.1UF	10.00%	16V
C416	1-107-826-11	CERAMIC CHIP 0.1UF	10.00%	16V
C417	1-126-390-11	ELECT CHIP 22UF	20.00%	6.3V
C419	1-162-970-11	CERAMIC CHIP 0.01UF	10.00%	25V
C420	1-162-970-11	CERAMIC CHIP 0.01UF	10.00%	25V

< CONNECTOR >

CN401	1-816-104-12	MEMORY STICK	
CN402	1-816-124-12	PIN, CONNECTOR 1P	

< DIODE >

D401	8-719-421-69	DIODE MA133	
D402	8-719-421-69	DIODE MA133	
D403	8-719-421-69	DIODE MA133	
D404	8-719-421-69	DIODE MA133	
D405	8-719-421-69	DIODE MA133	
D406	8-719-421-69	DIODE MA133	
D407	8-719-421-69	DIODE MA133	
D408	8-719-421-69	DIODE MA133	
D409	8-719-071-30	DIODE TLSU113P	
D410	8-719-158-02	DIODE RD3.9SB2	
D411	8-719-158-02	DIODE RD3.9SB2	
D412	8-719-421-69	DIODE MA133	
D413	8-719-421-69	DIODE MA133	
D414	8-719-421-69	DIODE MA133	
D415	8-719-421-69	DIODE MA133	
D416	8-719-421-69	DIODE MA133	
D417	8-719-421-69	DIODE MA133	

< FERRITE BEAD >

FB401	1-414-921-11	FERRITE	0UH
FB402	1-414-921-11	FERRITE	0UH
FB403	1-414-921-11	FERRITE	0UH
FB404	1-414-921-11	FERRITE	0UH

< IC >

IC401	8-759-639-86	IC SN65LVDS32DR
IC402	6-701-763-11	IC DS90LV017ATMX
IC403	8-759-698-08	IC SN74CBTLV1G125DCKR

< COIL >

L401	1-419-370-21	INDUCTOR	0UH
L402	1-419-370-21	INDUCTOR	0UH
L403	1-419-370-21	INDUCTOR	0UH
L404	1-419-370-21	INDUCTOR	0UH
L405	1-419-370-21	INDUCTOR	0UH

< TRANSISTOR >

Q401	8-729-140-63	TRANSISTOR 2SA1611-M5M6
Q402	8-729-029-14	TRANSISTOR DTC144EUA-T106
Q403	8-729-216-22	TRANSISTOR 2SA1162-G

REF.NO.	PART.NO	DESCRIPTION			REMARK
	< RESISTOR >				
R401	1-216-801-11	RES-CHIP	22	5%	1/10W
R402	1-216-801-11	RES-CHIP	22	5%	1/10W
R404	1-216-801-11	RES-CHIP	22	5%	1/10W
R405	1-218-692-11	METAL CHIP	1K	0.5%	1/16W
R406	1-216-809-11	RES-CHIP	100	5%	1/10W
R407	1-216-809-11	RES-CHIP	100	5%	1/10W
R408	1-216-809-11	RES-CHIP	100	5%	1/10W
R409	1-216-809-11	RES-CHIP	100	5%	1/10W
R410	1-216-803-11	RES-CHIP	33	5%	1/10W
R421	1-216-821-11	RES-CHIP	1K	5%	1/10W
R422	1-216-809-11	RES-CHIP	100	5%	1/10W
R424	1-216-833-11	RES-CHIP	10K	5%	1/10W
R425	1-216-845-11	RES-CHIP	100K	5%	1/10W
R426	1-218-871-11	METAL CHIP	10K	0.5%	1/10W
R428	1-216-864-11	SHORT CHIP	0		
R431	1-216-864-11	SHORT CHIP	0		

*A-1400-438-A M2 Board, Complete

REF.NO.	PART.NO	DESCRIPTION		REMARK
	< CAPACITOR >			
C103	1-162-921-11	CERAMIC CHIP	33PF	5.00% 50V
C104	1-162-921-11	CERAMIC CHIP	33PF	5.00% 50V
C105	1-107-826-11	CERAMIC CHIP	0.1UF	10.00% 16V
C107	1-107-826-11	CERAMIC CHIP	0.1UF	10.00% 16V
C108	1-107-826-11	CERAMIC CHIP	0.1UF	10.00% 16V
C109	1-162-927-11	CERAMIC CHIP	100PF	5.00% 50V
C110	1-162-927-11	CERAMIC CHIP	100PF	5.00% 50V
C111	1-107-826-11	CERAMIC CHIP	0.1UF	10.00% 16V
C112	1-162-927-11	CERAMIC CHIP	100PF	5.00% 50V
C113	1-107-826-11	CERAMIC CHIP	0.1UF	10.00% 16V
C114	1-162-927-11	CERAMIC CHIP	100PF	5.00% 50V
C115	1-107-826-11	CERAMIC CHIP	0.1UF	10.00% 16V
C116	1-162-927-11	CERAMIC CHIP	100PF	5.00% 50V
C117	1-107-826-11	CERAMIC CHIP	0.1UF	10.00% 16V
C118	1-107-826-11	CERAMIC CHIP	0.1UF	10.00% 16V
C119	1-162-927-11	CERAMIC CHIP	100PF	5.00% 50V
C120	1-107-826-11	CERAMIC CHIP	0.1UF	10.00% 16V
C121	1-162-927-11	CERAMIC CHIP	100PF	5.00% 50V
C122	1-107-826-11	CERAMIC CHIP	0.1UF	10.00% 16V
C123	1-162-927-11	CERAMIC CHIP	100PF	5.00% 50V
C124	1-107-826-11	CERAMIC CHIP	0.1UF	10.00% 16V
C125	1-162-927-11	CERAMIC CHIP	100PF	5.00% 50V
C126	1-107-826-11	CERAMIC CHIP	0.1UF	10.00% 16V
C127	1-162-927-11	CERAMIC CHIP	100PF	5.00% 50V
C128	1-115-467-11	CERAMIC CHIP	0.22UF	10.00% 10V
C129	1-115-467-11	CERAMIC CHIP	0.22UF	10.00% 10V
C130	1-126-964-11	ELECT	10UF	20.00% 50V
C131	1-126-964-11	ELECT	10UF	20.00% 50V
C132	1-126-964-11	ELECT	10UF	20.00% 50V
C133	1-107-826-11	CERAMIC CHIP	0.1UF	10.00% 16V
C134	1-162-927-11	CERAMIC CHIP	100PF	5.00% 50V
C135	1-126-947-11	ELECT	47UF	20.00% 35V
C136	1-126-947-11	ELECT	47UF	20.00% 35V
C137	1-126-947-11	ELECT	47UF	20.00% 35V
C138	1-126-947-11	ELECT	47UF	20.00% 35V
C139	1-126-947-11	ELECT	47UF	20.00% 35V
C140	1-107-826-11	CERAMIC CHIP	0.1UF	10.00% 16V
C141	1-107-826-11	CERAMIC CHIP	0.1UF	10.00% 16V
C142	1-107-826-11	CERAMIC CHIP	0.1UF	10.00% 16V
C143	1-107-826-11	CERAMIC CHIP	0.1UF	10.00% 16V
C144	1-107-826-11	CERAMIC CHIP	0.1UF	10.00% 16V
C145	1-162-927-11	CERAMIC CHIP	100PF	5.00% 50V
C146	1-162-927-11	CERAMIC CHIP	100PF	5.00% 50V
C147	1-162-927-11	CERAMIC CHIP	100PF	5.00% 50V
C148	1-162-927-11	CERAMIC CHIP	100PF	5.00% 50V
C149	1-162-927-11	CERAMIC CHIP	100PF	5.00% 50V
C150	1-107-823-11	CERAMIC CHIP	0.47UF	10.00% 16V
	< CONNECTOR >			
CN100	*1-793-497-11	CONNECTOR BOARD TO BOARD 40P		
CN104	*1-564-509-11	PLUG, CONNECTOR 6P		
	< FERRITE BEAD >			
FB103	1-414-766-22	FERRITE	0UH	
FB104	1-414-766-22	FERRITE	0UH	
FB105	1-414-766-22	FERRITE	0UH	
FB106	1-414-766-22	FERRITE	0UH	
FB107	1-414-766-22	FERRITE	0UH	
FB108	1-414-766-22	FERRITE	0UH	
FB111	1-414-766-22	FERRITE	0UH	
FB112	1-414-766-22	FERRITE	0UH	
FB135	1-414-766-22	FERRITE	0UH	
	< FILTER >			
FL100	1-233-736-21	FILTER, EMI		
FL101	1-233-736-21	FILTER, EMI		
FL102	1-233-736-21	FILTER, EMI		
FL103	1-233-736-21	FILTER, EMI		
FL104	1-233-736-21	FILTER, EMI		
	< IC >			
IC101	6-702-313-01	IC PST600IMT		
IC103	6-702-057-01	IC SDA6000-B11-GEG		
IC104	8-759-682-41	IC M24C32-WMN6T(A)		
IC105	8-759-831-90	IC MT48LC8M16A2TG-75		
IC106	6-701-848-01	IC KF25BDT		
	1-785-449-12	SOCKET, IC		
IC107	6-701-849-01	IC M27V160-100K1		

REF.NO.	PART.NO	DESCRIPTION			REMARK
		< TRANSISTOR >			
Q101	8-729-120-28	TRANSISTOR 2SC1623-L5L6			
Q102	1-801-806-11	TRANSISTOR DTC144EKA			
Q103	8-729-120-28	TRANSISTOR 2SC1623-L5L6			
Q104	8-729-120-28	TRANSISTOR 2SC1623-L5L6			
Q105	8-729-120-28	TRANSISTOR 2SC1623-L5L6			
Q106	8-729-120-28	TRANSISTOR 2SC1623-L5L6			
Q108	8-729-028-28	TRANSISTOR 2SK2036(TE85L)			
Q109	8-729-028-28	TRANSISTOR 2SK2036(TE85L)			
Q111	8-729-028-28	TRANSISTOR 2SK2036(TE85L)			
Q112	8-729-026-49	TRANSISTOR 2SA1037AK-T146-R			
Q113	8-729-026-49	TRANSISTOR 2SA1037AK-T146-R			
Q114	8-729-026-49	TRANSISTOR 2SA1037AK-T146-R			
Q116	8-729-027-46	TRANSISTOR DTC114YKA-T146			
Q117	8-729-120-28	TRANSISTOR 2SC1623-L5L6			
Q118	8-729-027-46	TRANSISTOR DTC114YKA-T146			
Q119	8-729-027-46	TRANSISTOR DTC114YKA-T146			
Q120	8-729-027-46	TRANSISTOR DTC114YKA-T146			
		< RESISTOR >			
R101	1-216-864-11	SHORT CHIP	0		
R102	1-216-833-11	RES-CHIP	10K	5%	1/10W
R123	1-216-829-11	RES-CHIP	4.7K	5%	1/10W
R124	1-216-864-11	SHORT CHIP	0		
R125	1-216-829-11	RES-CHIP	4.7K	5%	1/10W
R126	1-216-833-11	RES-CHIP	10K	5%	1/10W
R127	1-216-864-11	SHORT CHIP	0		
R130	1-216-821-11	RES-CHIP	1K	5%	1/10W
R132	1-216-833-11	RES-CHIP	10K	5%	1/10W
R133	1-216-833-11	RES-CHIP	10K	5%	1/10W
R134	1-216-833-11	RES-CHIP	10K	5%	1/10W
R137	1-216-833-11	RES-CHIP	10K	5%	1/10W
R138	1-216-833-11	RES-CHIP	10K	5%	1/10W
R139	1-216-833-11	RES-CHIP	10K	5%	1/10W
R140	1-216-833-11	RES-CHIP	10K	5%	1/10W
R141	1-216-833-11	RES-CHIP	10K	5%	1/10W
R142	1-216-833-11	RES-CHIP	10K	5%	1/10W
R143	1-216-832-11	RES-CHIP	8.2K	5%	1/10W
R144	1-216-845-11	RES-CHIP	100K	5%	1/10W
R145	1-216-833-11	RES-CHIP	10K	5%	1/10W
R146	1-216-812-11	RES-CHIP	180	5%	1/10W
R150	1-216-825-11	RES-CHIP	2.2K	5%	1/10W
R151	1-216-825-11	RES-CHIP	2.2K	5%	1/10W
R152	1-216-829-11	RES-CHIP	4.7K	5%	1/10W
R158	1-216-825-11	RES-CHIP	2.2K	5%	1/10W
R159	1-216-833-11	RES-CHIP	10K	5%	1/10W
R161	1-216-825-11	RES-CHIP	2.2K	5%	1/10W
R163	1-216-864-11	SHORT CHIP	0		
R164	1-216-833-11	RES-CHIP	10K	5%	1/10W
R165	1-216-824-11	RES-CHIP	1.8K	5%	1/10W
R166	1-216-824-11	RES-CHIP	1.8K	5%	1/10W
R167	1-216-825-11	RES-CHIP	2.2K	5%	1/10W
R168	1-216-827-11	RES-CHIP	3.3K	5%	1/10W
R169	1-216-827-11	RES-CHIP	3.3K	5%	1/10W
R170	1-216-833-11	RES-CHIP	10K	5%	1/10W
R171	1-216-821-11	RES-CHIP	1K	5%	1/10W
R172	1-216-821-11	RES-CHIP	1K	5%	1/10W
R173	1-216-821-11	RES-CHIP	1K	5%	1/10W
R174	1-216-824-11	RES-CHIP	1.8K	5%	1/10W
R175	1-216-824-11	RES-CHIP	1.8K	5%	1/10W
R176	1-216-824-11	RES-CHIP	1.8K	5%	1/10W
R177	1-216-805-11	RES-CHIP	47	5%	1/10W
R178	1-216-805-11	RES-CHIP	47	5%	1/10W
R179	1-216-805-11	RES-CHIP	47	5%	1/10W
R180	1-216-833-11	RES-CHIP	10K	5%	1/10W
R181	1-216-833-11	RES-CHIP	10K	5%	1/10W
R182	1-216-833-11	RES-CHIP	10K	5%	1/10W
R183	1-216-809-11	RES-CHIP	100	5%	1/10W
R184	1-216-833-11	RES-CHIP	10K	5%	1/10W
R185	1-216-833-11	RES-CHIP	10K	5%	1/10W
R186	1-216-808-11	RES-CHIP	82	5%	1/10W
R187	1-216-833-11	RES-CHIP	10K	5%	1/10W
R188	1-216-827-11	RES-CHIP	3.3K	5%	1/10W
R189	1-216-827-11	RES-CHIP	3.3K	5%	1/10W
R190	1-216-801-11	RES-CHIP	22	5%	1/10W
R191	1-216-801-11	RES-CHIP	22	5%	1/10W
R192	1-216-801-11	RES-CHIP	22	5%	1/10W
R193	1-216-801-11	RES-CHIP	22	5%	1/10W
R194	1-216-801-11	RES-CHIP	22	5%	1/10W
R195	1-216-801-11	RES-CHIP	22	5%	1/10W
R196	1-216-801-11	RES-CHIP	22	5%	1/10W
R197	1-216-801-11	RES-CHIP	22	5%	1/10W
R200	1-216-829-11	RES-CHIP	4.7K	5%	1/10W
R201	1-216-864-11	SHORT CHIP	0		
R212	1-218-835-11	METAL CHIP	330	0.5%	1/10W
R215	1-216-829-11	RES-CHIP	4.7K	5%	1/10W
R218	1-216-864-11	SHORT CHIP	0		
R227	1-216-801-11	RES-CHIP	22	5%	1/10W
R228	1-216-864-11	SHORT CHIP	0		
R229	1-216-864-11	SHORT CHIP	0		
R230	1-216-864-11	SHORT CHIP	0		
R232	1-216-864-11	SHORT CHIP	0		
R233	1-216-864-11	SHORT CHIP	0		
R234	1-216-864-11	SHORT CHIP	0		
R235	1-216-864-11	SHORT CHIP	0		
R236	1-216-864-11	SHORT CHIP	0		
R237	1-216-864-11	SHORT CHIP	0		
R240	1-216-845-11	RES-CHIP	100K	5%	1/10W
R245	1-216-845-11	RES-CHIP	100K	5%	1/10W

REF.NO.	PART.NO	DESCRIPTION	REMARK
R246	1-216-864-11	SHORT CHIP 0	
R247	1-216-864-11	SHORT CHIP 0	
R248	1-216-827-11	RES-CHIP 3.3K 5% 1/10W	
R249	1-216-827-11	RES-CHIP 3.3K 5% 1/10W	
		< RESISTOR CHIP >	
RB100	1-239-621-11	NETWORK RESISTOR (CHIP) 22	
RB101	1-239-621-11	NETWORK RESISTOR (CHIP) 22	
RB102	1-239-621-11	NETWORK RESISTOR (CHIP) 22	
RB103	1-239-621-11	NETWORK RESISTOR (CHIP) 22	
RB104	1-239-621-11	NETWORK RESISTOR (CHIP) 22	
RB105	1-239-621-11	NETWORK RESISTOR (CHIP) 22	
RB106	1-239-711-91	NETWORK RESISTOR (CHIP) 0	
RB107	1-239-711-91	NETWORK RESISTOR (CHIP) 0	
RB108	1-239-711-91	NETWORK RESISTOR (CHIP) 0	
RB109	1-239-711-91	NETWORK RESISTOR (CHIP) 0	
RB110	1-239-711-91	NETWORK RESISTOR (CHIP) 0	
RB111	1-239-711-91	NETWORK RESISTOR (CHIP) 0	
RB112	1-239-711-91	NETWORK RESISTOR (CHIP) 0	
RB113	1-239-621-11	NETWORK RESISTOR (CHIP) 22	
RB114	1-239-621-11	NETWORK RESISTOR (CHIP) 22	
RB115	1-239-621-11	NETWORK RESISTOR (CHIP) 22	
RB116	1-239-621-11	NETWORK RESISTOR (CHIP) 22	
RB117	1-239-621-11	NETWORK RESISTOR (CHIP) 22	
RB118	1-239-621-11	NETWORK RESISTOR (CHIP) 22	
RB119	1-239-621-11	NETWORK RESISTOR (CHIP) 22	
RB120	1-239-390-11	NETWORK RESISTOR (CHIP) 33	
RB121	1-239-390-11	NETWORK RESISTOR (CHIP) 33	
RB122	1-239-390-11	NETWORK RESISTOR (CHIP) 33	
RB123	1-239-390-11	NETWORK RESISTOR (CHIP) 33	
		< CRYSTAL >	
X100	1-567-162-00	OSCILLATOR, CRYSTAL	

*A-1400-475-A H3 Board, Complete

REF.NO.	PART.NO	DESCRIPTION	REMARK
		< CAPACITOR >	
C900	1-102-074-00	CERAMIC 0.001UF 10.00% 50V	
C901	1-102-074-00	CERAMIC 0.001UF 10.00% 50V	
C902	1-102-074-00	CERAMIC 0.001UF 10.00% 50V	
C903	1-102-074-00	CERAMIC 0.001UF 10.00% 50V	
C906	1-126-960-11	ELECT 1UF 20.00% 50V	
C907	1-126-960-11	ELECT 1UF 20.00% 50V	
C908	1-102-106-00	CERAMIC 100PF 10.00% 50V	
C909	1-102-106-00	CERAMIC 100PF 10.00% 50V	
C911	1-102-074-00	CERAMIC 0.001UF 10.00% 50V	
C912	1-102-074-00	CERAMIC 0.001UF 10.00% 50V	
		< CONNECTOR >	
CN900	1-779-947-11	TERMINAL BLOCK, S	
CN907	1-764-334-11	PIN, CONNECTOR(PCB)(V TYPE)11P	
CN909	*1-564-510-11	PLUG, CONNECTOR 7P	
		< DIODE >	
D902	8-719-929-15	DIODE HZS9.1NB2	
D903	8-719-929-15	DIODE HZS9.1NB2	
D904	8-719-109-97	DIODE RD6.8ESB2	
D905	8-719-109-97	DIODE RD6.8ESB2	
		< SOCKET >	
J900	1-750-264-11	JACK	
		< COIL >	
L900	1-535-143-61	LEAD, JUMPER (5.0MM)	
L901	1-535-143-61	LEAD, JUMPER (5.0MM)	
L902	1-408-603-31	INDUCTOR 10UH	
L903	1-408-603-31	INDUCTOR 10UH	
L904	1-410-119-11	INDUCTOR 1MH	
		< RESISTOR >	
R903	1-249-406-11	CARBON 120 5% 1/4W	
R904	1-249-406-11	CARBON 120 5% 1/4W	
R905	1-247-895-91	CARBON 470K 5% 1/4W	
R906	1-247-895-91	CARBON 470K 5% 1/4W	
R909	1-247-895-91	CARBON 470K 5% 1/4W	
R910	1-247-895-91	CARBON 470K 5% 1/4W	
R915	1-249-406-11	CARBON 120 5% 1/4W	
R916	1-249-406-11	CARBON 120 5% 1/4W	
R917	1-247-807-31	CARBON 100 5% 1/4W	
R918	1-247-807-31	CARBON 100 5% 1/4W	
		< SWITCH >	
S900	1-692-431-21	SWITCH, TACTILE	
S901	1-692-431-21	SWITCH, TACTILE	
S902	1-692-431-21	SWITCH, TACTILE	
S903	1-692-431-21	SWITCH, TACTILE	
S904	1-692-431-21	SWITCH, TACTILE	
S905	1-692-431-21	SWITCH, TACTILE	

REF.NO.	PART.NO	DESCRIPTION	REMARK
*A-1400-473-A		A Board, Complete (KV-32FQ80B)	
*A-1401-340-A		A Board, Complete (KV-32FQ80E/ KV-32FQ80K)	
*A-1401-344-A		A Board, Complete (KV-32FQ80U)	
*A-1400-478-A		A Board, Complete (KV-36FQ80B)	
*A-1401-268-A		A Board, Complete (KV-36FQ80E/ KV-36FQ80K)	
	*4-042-408-01	PIN, COATING LEAD	
	4-202-373-01	SPRING, IC	
	4-206-065-01	SPACER INSULATING	
	*4-206-387-11	SHIELD BASE, N	
	4-382-854-01	SCREW (M3X8), P, SW (+)	

A Board Common Parts

< CAPACITOR >

C1014	1-126-957-11	ELECT	0.22UF	20.00% 50V
C1017	1-104-661-91	ELECT	330UF	20.00% 16V
C1018	1-162-970-11	CERAMIC CHIP	0.01UF	10.00% 25V
C1019	1-164-004-11	CERAMIC CHIP	0.1UF	10.00% 25V
C1020	1-126-933-11	ELECT	100UF	20.00% 16V
C1022	1-162-927-11	CERAMIC CHIP	100PF	5.00% 50V
C1023	1-164-004-11	CERAMIC CHIP	0.1UF	10.00% 25V
C1024	1-126-935-11	ELECT	470UF	20.00% 16V
C1025	1-126-935-11	ELECT	470UF	20.00% 16V
C1028	1-104-665-11	ELECT	100UF	20.00% 25V
C1029	1-136-495-11	FILM	0.068UF	5.00% 50V
C1030	1-136-495-11	FILM	0.068UF	5.00% 50V
C1031	1-164-004-11	CERAMIC CHIP	0.1UF	10.00% 25V
C1032	1-126-916-11	ELECT	1000UF	20.00% 6.3V
C1033	1-126-916-11	ELECT	1000UF	20.00% 6.3V
C1034	1-126-935-11	ELECT	470UF	20.00% 16V
C1035	1-104-652-11	ELECT	470UF	20.00% 10V
C1036	1-164-004-11	CERAMIC CHIP	0.1UF	10.00% 25V
C1037	1-126-939-11	ELECT	10000UF	20.00% 16V
C1038	1-104-665-11	ELECT	100UF	20.00% 25V
C1040	1-164-004-11	CERAMIC CHIP	0.1UF	10.00% 25V
C1041	1-136-495-11	FILM	0.068UF	5.00% 50V
C1042	1-126-916-11	ELECT	1000UF	20.00% 6.3V
C1043	1-164-156-11	CERAMIC CHIP	0.1UF	25V
C1044	1-164-156-11	CERAMIC CHIP	0.1UF	25V
C1045	1-104-665-11	ELECT	100UF	20.00% 25V
C1046	1-126-943-11	ELECT	2200UF	20.00% 25V
C1047	1-126-927-11	ELECT	2200UF	20.00% 10V
C1049	1-115-339-11	CERAMIC CHIP	0.1UF	10.00% 50V
C1052	1-126-935-11	ELECT	470UF	20.00% 16V
C1053	1-126-964-11	ELECT	10UF	20.00% 50V
C1054	1-126-964-11	ELECT	10UF	20.00% 50V
C1055	1-164-156-11	CERAMIC CHIP	0.1UF	25V
C1056	1-164-156-11	CERAMIC CHIP	0.1UF	25V
C1057	1-126-933-11	ELECT	100UF	20.00% 16V
C1062	1-126-935-11	ELECT	470UF	20.00% 16V
C1070	1-126-960-11	ELECT	1UF	20.00% 50V
C1100	1-126-933-11	ELECT	100UF	20.00% 16V
C1101	1-162-970-11	CERAMIC CHIP	0.01UF	10.00% 25V
C1102	1-162-970-11	CERAMIC CHIP	0.01UF	10.00% 25V
C1103	1-126-933-11	ELECT	100UF	20.00% 16V
C1104	1-126-933-11	ELECT	100UF	20.00% 16V
C1105	1-162-970-11	CERAMIC CHIP	0.01UF	10.00% 25V
C1201	1-115-340-11	CERAMIC CHIP	0.22UF	10.00% 25V
C1202	1-126-947-11	ELECT	47UF	20.00% 35V
C1203	1-136-175-00	FILM	0.68UF	5.00% 50V
C1204	1-164-004-11	CERAMIC CHIP	0.1UF	10.00% 25V
C1205	1-126-943-11	ELECT	2200UF	20.00% 25V
C1206	1-164-004-11	CERAMIC CHIP	0.1UF	10.00% 25V
C1207	1-164-004-11	CERAMIC CHIP	0.1UF	10.00% 25V
C1208	1-164-004-11	CERAMIC CHIP	0.1UF	10.00% 25V
C1209	1-163-135-00	CERAMIC CHIP	560PF	5.00% 50V
C1210	1-126-965-91	ELECT	22UF	20.00% 50V
C1211	1-115-339-11	CERAMIC CHIP	0.1UF	10.00% 50V
C1212	1-115-339-11	CERAMIC CHIP	0.1UF	10.00% 50V
C1213	1-126-965-91	ELECT	22UF	20.00% 50V
C1214	1-115-339-11	CERAMIC CHIP	0.1UF	10.00% 50V
C1215	1-162-966-11	CERAMIC CHIP	0.0022UF	10.00% 50V
C1216	1-162-927-11	CERAMIC CHIP	100PF	5.00% 50V
C1217	1-163-021-91	CERAMIC CHIP	0.01UF	10.00% 50V
C1218	1-164-505-11	CERAMIC CHIP	2.2UF	16V
C1219	1-164-004-11	CERAMIC CHIP	0.1UF	10.00% 25V
C1220	1-164-004-11	CERAMIC CHIP	0.1UF	10.00% 25V
C1222	1-130-777-00	MYLAR	0.1UF	5.00% 63V
C1223	1-126-952-11	ELECT	1000UF	20.00% 35V
C1224	1-111-216-91	ELECT	150UF	20.00% 63V
C1225	1-164-222-91	CERAMIC CHIP	0.22UF	25V
C1226	1-164-004-11	CERAMIC CHIP	0.1UF	10.00% 25V
C1227	1-126-952-11	ELECT	1000UF	20.00% 35V
C1228	1-126-961-11	ELECT	2.2UF	20.00% 50V
C1229	1-126-944-11	ELECT	3300UF	20.00% 25V
C1230	1-164-004-11	CERAMIC CHIP	0.1UF	10.00% 25V
C1231	1-162-966-11	CERAMIC CHIP	0.0022UF	10.00% 50V
C1232	1-126-947-11	ELECT	47UF	20.00% 35V
C1233	1-164-346-11	CERAMIC CHIP	1UF	16V
C1234	1-162-968-11	CERAMIC CHIP	0.0047UF	10.00% 50V
C1235	1-164-346-11	CERAMIC CHIP	1UF	16V
C1236	1-162-966-11	CERAMIC CHIP	0.0022UF	10.00% 50V
C1237	1-126-944-11	ELECT	3300UF	20.00% 25V
C1238	1-115-340-11	CERAMIC CHIP	0.22UF	10.00% 25V
C1239	1-163-087-00	CERAMIC CHIP	4PF	0.25PF 50V
C1242	1-163-087-00	CERAMIC CHIP	4PF	0.25PF 50V
C1245	1-162-923-11	CERAMIC CHIP	47PF	5.00% 50V
C1247	1-126-964-11	ELECT	10UF	20.00% 50V
C1249	1-126-964-11	ELECT	10UF	20.00% 50V

REF.NO.	PART.NO	DESCRIPTION	REMARK
C1250	1-126-947-11	ELECT 47UF	20.00% 35V
C1251	1-163-107-00	CERAMIC CHIP 39PF	5.00% 50V
C1252	1-126-947-11	ELECT 47UF	20.00% 35V
C1254	1-165-319-11	CERAMIC CHIP 0.1UF	50V
C1255	1-164-004-11	CERAMIC CHIP 0.1UF	10.00% 25V
C1256	1-107-823-11	CERAMIC CHIP 0.47UF	10.00% 16V
C1257	1-164-004-11	CERAMIC CHIP 0.1UF	10.00% 25V
C1258	1-164-004-11	CERAMIC CHIP 0.1UF	10.00% 25V
C1264	1-162-966-11	CERAMIC CHIP 0.0022UF	10.00% 50V
C1265	1-162-966-11	CERAMIC CHIP 0.0022UF	10.00% 50V
C1270	1-162-923-11	CERAMIC CHIP 47PF	5.00% 50V
C1271	1-162-923-11	CERAMIC CHIP 47PF	5.00% 50V
C1273	1-162-927-11	CERAMIC CHIP 100PF	5.00% 50V
C1274	1-163-241-11	CERAMIC CHIP 39PF	5.00% 50V
C1275	1-104-665-11	ELECT 100UF	20.00% 25V
C1276	1-163-021-91	CERAMIC CHIP 0.01UF	10.00% 50V
C1277	1-107-823-11	CERAMIC CHIP 0.47UF	10.00% 16V
C1278	1-107-823-11	CERAMIC CHIP 0.47UF	10.00% 16V
C1281	1-107-823-11	CERAMIC CHIP 0.47UF	10.00% 16V
C1282	1-126-964-11	ELECT 10UF	20.00% 50V
C1283	1-126-947-11	ELECT 47UF	20.00% 35V
C1284	1-164-004-11	CERAMIC CHIP 0.1UF	10.00% 25V
C1285	1-164-506-11	CERAMIC CHIP 4.7UF	16V
C1286	1-126-947-11	ELECT 47UF	20.00% 35V
C1287	1-126-947-11	ELECT 47UF	20.00% 35V
C1290	1-164-506-11	CERAMIC CHIP 4.7UF	16V
C1402	1-104-665-11	ELECT 100UF	20.00% 25V
C1403	1-164-222-91	CERAMIC CHIP 0.22UF	25V
C1404	1-164-222-91	CERAMIC CHIP 0.22UF	25V
C1405	1-104-665-11	ELECT 100UF	20.00% 25V
C1406	1-162-964-11	CERAMIC CHIP 0.001UF	10.00% 50V
C1407	1-164-222-91	CERAMIC CHIP 0.22UF	25V
C1408	1-107-823-11	CERAMIC CHIP 0.47UF	10.00% 16V
C1409	1-165-112-11	CERAMIC CHIP 0.33UF	16V
C1410	1-162-968-11	CERAMIC CHIP 0.0047UF	10.00% 50V
C1412	1-107-826-11	CERAMIC CHIP 0.1UF	10.00% 16V
C1413	1-107-826-11	CERAMIC CHIP 0.1UF	10.00% 16V
C1414	1-107-826-11	CERAMIC CHIP 0.1UF	10.00% 16V
C1416	1-104-665-11	ELECT 100UF	20.00% 25V
C1418	1-164-222-91	CERAMIC CHIP 0.22UF	25V
C1419	1-115-339-11	CERAMIC CHIP 0.1UF	10.00% 50V
C1420	1-165-112-11	CERAMIC CHIP 0.33UF	16V
C1424	1-126-963-11	ELECT 4.7UF	20.00% 50V
C1425	1-162-927-11	CERAMIC CHIP 100PF	5.00% 50V
C1426	1-115-340-11	CERAMIC CHIP 0.22UF	10.00% 25V
C1430	1-107-823-11	CERAMIC CHIP 0.47UF	10.00% 16V
C1431	1-107-826-11	CERAMIC CHIP 0.1UF	10.00% 16V
C1432	1-107-826-11	CERAMIC CHIP 0.1UF	10.00% 16V
C1434	1-107-826-11	CERAMIC CHIP 0.1UF	10.00% 16V
C1436	1-107-826-11	CERAMIC CHIP 0.1UF	10.00% 16V
C1437	1-107-826-11	CERAMIC CHIP 0.1UF	10.00% 16V
C1438	1-107-826-11	CERAMIC CHIP 0.1UF	10.00% 16V
C1439	1-137-581-11	FILM 0.1UF	5.00% 100V
C1440	1-164-004-11	CERAMIC CHIP 0.1UF	10.00% 25V
C1441	1-162-968-11	CERAMIC CHIP 0.0047UF	10.00% 50V
C1443	1-164-004-11	CERAMIC CHIP 0.1UF	10.00% 25V
C1444	1-126-947-11	ELECT 47UF	20.00% 35V
C1447	1-164-222-91	CERAMIC CHIP 0.22UF	25V
C1451	1-164-222-91	CERAMIC CHIP 0.22UF	25V
C1452	1-164-222-91	CERAMIC CHIP 0.22UF	25V
C1455	1-126-947-11	ELECT 47UF	20.00% 35V
C1457	1-104-665-11	ELECT 100UF	20.00% 25V
C1458	1-107-823-11	CERAMIC CHIP 0.47UF	10.00% 16V
C1459	1-126-963-11	ELECT 4.7UF	20.00% 50V
C1460	1-126-963-11	ELECT 4.7UF	20.00% 50V
C1461	1-162-966-11	CERAMIC CHIP 0.0022UF	10.00% 50V
C1462	1-126-947-11	ELECT 47UF	20.00% 35V
C1464	1-164-222-91	CERAMIC CHIP 0.22UF	25V
C1475	1-107-826-11	CERAMIC CHIP 0.1UF	10.00% 16V
C1476	1-126-933-11	ELECT 100UF	20.00% 16V
C1703	1-128-527-11	ELECT 330UF	20.00% 25V
C1704	1-126-968-11	ELECT 100UF	20.00% 50V
C1705	1-163-021-91	CERAMIC CHIP 0.01UF	10.00% 50V
C1706	1-137-401-11	MYLAR 0.22UF	5.00% 100V
C1707	1-102-228-00	CERAMIC 470PF	10.00% 500V
C1708	1-106-220-00	MYLAR 0.1UF	10.00% 100V
C1709	1-129-702-00	MYLAR 0.001UF	10.00% 400V
C1710	1-130-785-11	MYLAR 0.47UF	5.00% 100V
C1711	1-163-021-91	CERAMIC CHIP 0.01UF	10.00% 50V
C1712	1-126-968-11	ELECT 100UF	20.00% 50V
C1715	1-162-964-11	CERAMIC CHIP 0.001UF	10.00% 50V
C1720	1-126-964-11	ELECT 10UF	20.00% 50V
C1721	1-162-970-11	CERAMIC CHIP 0.01UF	10.00% 25V
C1722	1-163-017-00	CERAMIC CHIP 0.0047UF	10.00% 50V
C1800	1-162-968-11	CERAMIC CHIP 0.0047UF	10.00% 50V
C1801	1-162-927-11	CERAMIC CHIP 100PF	5.00% 50V
C1802	1-126-947-11	ELECT 47UF	20.00% 35V
C1803	1-164-222-91	CERAMIC CHIP 0.22UF	25V
C1804	1-163-809-11	CERAMIC CHIP 0.047UF	10.00% 25V
C1805	1-164-182-11	CERAMIC CHIP 0.0033UF	10.00% 50V
C1806	1-163-809-11	CERAMIC CHIP 0.047UF	10.00% 25V
C1807	1-164-004-11	CERAMIC CHIP 0.1UF	10.00% 25V
C1808	1-164-004-11	CERAMIC CHIP 0.1UF	10.00% 25V
C1814	1-126-947-11	ELECT 47UF	20.00% 35V
C1816	1-164-004-11	CERAMIC CHIP 0.1UF	10.00% 25V
C1817	1-126-964-11	ELECT 10UF	20.00% 50V
C1822	1-107-823-11	CERAMIC CHIP 0.47UF	10.00% 16V
C1827	1-164-336-11	CERAMIC CHIP 0.33UF	25V
C1832	1-164-222-91	CERAMIC CHIP 0.22UF	25V
C1837	1-136-153-00	FILM 0.01UF	5.00% 50V

REF.NO.	PART.NO	DESCRIPTION	REMARK
C1843	1-137-499-11	FILM 0.015UF	5.00% 630V
C1850	1-126-947-11	ELECT 47UF	20.00% 35V
C1852	1-137-194-81	FILM 0.47UF	5.00% 50V
C1853	1-164-222-91	CERAMIC CHIP 0.22UF	25V
C1854	1-126-947-11	ELECT 47UF	20.00% 35V
C1855	1-126-947-11	ELECT 47UF	20.00% 35V
C1856	1-164-222-91	CERAMIC CHIP 0.22UF	25V
C1859	1-104-665-11	ELECT 100UF	20.00% 25V
C1861	1-126-941-11	ELECT 470UF	20.00% 25V
C1950	1-107-826-11	CERAMIC CHIP 0.1UF	10.00% 16V
C1951	1-136-165-00	FILM 0.1UF	5.00% 50V
C1952	1-126-947-11	ELECT 47UF	20.00% 35V
C1953	1-107-826-11	CERAMIC CHIP 0.1UF	10.00% 16V
C1970	1-126-964-11	ELECT 10UF	20.00% 50V
C1971	1-126-964-11	ELECT 10UF	20.00% 50V
C1972	1-162-970-11	CERAMIC CHIP 0.01UF	10.00% 25V
C1973	1-162-970-11	CERAMIC CHIP 0.01UF	10.00% 25V
C1974	1-126-964-11	ELECT 10UF	20.00% 50V
C1975	1-126-964-11	ELECT 10UF	20.00% 50V
C1980	1-164-156-11	CERAMIC CHIP 0.1UF	25V
C1981	1-107-826-11	CERAMIC CHIP 0.1UF	10.00% 16V
	< CERAMIC TRAP >		
CF1270	1-781-328-21	TRAP, CERAMIC	
	< CONNECTOR >		
CN1000	1-793-494-11	CONNECTOR BOARD TO BOARD 40P	
CN1001	1-793-498-11	CONNECTOR BOARD TO BOARD 50P	
CN1004	1-695-915-11	TAB (CONTACT)	
CN1006	1-695-915-11	TAB (CONTACT)	
CN1201	*1-564-507-11	PLUG, CONNECTOR 4P	
CN1202	*1-564-507-11	PLUG, CONNECTOR 4P	
CN1251	1-695-915-11	TAB (CONTACT)	
CN1602	*1-564-508-11	PLUG, CONNECTOR 5P	
CN1701	1-764-334-11	PIN, CONNECTOR(PCB)(V TYPE)11P	
CN1706	*1-564-511-11	PLUG, CONNECTOR 8P	
CN1802	*1-564-511-11	PLUG, CONNECTOR 8P	
CN1803	*1-564-508-11	PLUG, CONNECTOR 5P	
CN1804	*1-564-511-11	PLUG, CONNECTOR 8P	
CN1805	1-764-333-11	PIN, CONNECTOR(PCB)(V TYPE)10P	
CN1807	*1-564-510-11	PLUG, CONNECTOR 7P	
CN1901	*1-564-506-11	PLUG, CONNECTOR 3P	
CN1903	1-691-772-11	PLUG (MICRO CONNECTOR) 10P	
CN1999	*1-564-520-11	PLUG, CONNECTOR 5P	
CN2000	*1-564-516-11	PLUG, CONNECTOR 13P	
CN7109	1-793-495-11	CONNECTOR BOARD TO BOARD 50P	

REF.NO.	PART.NO	DESCRIPTION	REMARK
	< DIODE >		
D1003	8-719-914-43	DIODE DAN202K	
D1004	8-719-914-43	DIODE DAN202K	
D1005	8-719-500-70	DIODE D5S4M	
D1006	8-719-500-70	DIODE D5S4M	
D1007	8-719-914-44	DIODE DAP202K	
D1008	8-719-914-44	DIODE DAP202K	
D1009	8-719-069-55	DIODE UDZSTE-175.6B	
D1010	8-719-914-43	DIODE DAN202K	
D1011	8-719-069-55	DIODE UDZSTE-175.6B	
D1012	8-719-083-60	DIODE UDZSTE-174.7B	
D1013	8-719-069-56	DIODE UDZSTE-176.2B	
D1014	8-719-069-56	DIODE UDZSTE-176.2B	
D1015	8-719-063-73	DIODE D1NL20U-TR	
D1016	8-719-069-55	DIODE UDZSTE-175.6B	
D1017	8-719-063-73	DIODE D1NL20U-TR	
D1018	8-719-500-70	DIODE D5S4M	
D1019	8-719-069-55	DIODE UDZSTE-175.6B	
D1070	8-719-914-44	DIODE DAP202K	
D1201	8-719-914-43	DIODE DAN202K	
D1202	8-719-914-44	DIODE DAP202K	
D1203	8-719-914-44	DIODE DAP202K	
D1204	8-719-914-43	DIODE DAN202K	
D1205	8-719-914-43	DIODE DAN202K	
D1206	8-719-083-60	DIODE UDZSTE-174.7B	
D1207	8-719-421-57	DIODE MA73-TX	
D1209	8-719-069-54	DIODE UDZSTE-175.1B	
D1210	8-719-510-02	DIODE D1NS4	
D1211	8-719-510-02	DIODE D1NS4	
D1235	8-719-083-82	DIODE UDZS-TE17-12B	
D1236	8-719-083-82	DIODE UDZS-TE17-12B	
D1239	8-719-110-09	DIODE RD8.2ESB3	
D1403	8-719-914-43	DIODE DAN202K	
D1406	8-719-069-60	DIODE UDZSTE-179.1B	
D1701	8-719-110-49	DIODE RD18ESB2	
D1702	8-719-908-03	DIODE GP08D	
D1703	8-719-110-41	DIODE RD15ESB2	
D1704	8-719-081-97	DIODE MMDL914T1	
D1705	8-719-081-97	DIODE MMDL914T1	
D1801	8-719-914-43	DIODE DAN202K	
D1802	8-719-914-43	DIODE DAN202K	
D1803	8-719-914-43	DIODE DAN202K	
D1804	8-719-914-43	DIODE DAN202K	
D1805	8-719-105-82	DIODE RD5.1M-B2	
D1806	8-719-914-43	DIODE DAN202K	
D1807	8-719-914-43	DIODE DAN202K	
D1808	8-719-914-43	DIODE DAN202K	
D1809	8-719-987-87	DIODE ERA85-009	
D1810	8-719-991-33	DIODE 1SS133T-77	

REF.NO.	PART.NO	DESCRIPTION	REMARK
D1811	8-719-914-43	DIODE DAN202K	
D1813	8-719-063-73	DIODE D1NL20U-TR	
		< FERRITE BEAD >	
FB1003	1-535-143-61	LEAD, JUMPER (5.0MM)	
FB1004	1-535-143-61	LEAD, JUMPER (5.0MM)	
FB1005	1-414-766-22	FERRITE 0UH	
FB1006	1-414-766-22	FERRITE 0UH	
FB1007	1-414-766-22	FERRITE 0UH	
FB1008	1-414-766-22	FERRITE 0UH	
FB1009	1-414-766-22	FERRITE 0UH	
FB1010	1-414-766-22	FERRITE 0UH	
FB1011	1-216-295-91	SHORT CHIP 0	
FB1012	1-216-295-91	SHORT CHIP 0	
FB1013	1-535-143-61	LEAD, JUMPER (5.0MM)	
FB1014	1-414-766-22	FERRITE 0UH	
FB1015	1-414-766-22	FERRITE 0UH	
FB1016	1-414-766-22	FERRITE 0UH	
FB1017	1-414-766-22	FERRITE 0UH	
FB1018	1-414-766-22	FERRITE 0UH	
FB1019	1-414-766-22	FERRITE 0UH	
FB1020	1-414-766-22	FERRITE 0UH	
FB1021	1-414-766-22	FERRITE 0UH	
FB1022	1-414-766-22	FERRITE 0UH	
FB1201	1-410-397-21	FERRITE 1.1UH	
FB1202	1-410-397-21	FERRITE 1.1UH	
FB1203	1-414-766-22	FERRITE 0UH	
FB1204	1-469-350-21	FERRITE 0UH	
FB1801	1-414-234-22	FERRITE 0UH	
FB1802	1-414-234-22	FERRITE 0UH	
FB1803	1-414-234-22	FERRITE 0UH	
		< FILTER >	
FL1010	1-233-736-21	FILTER, EMI	
FL1011	1-239-899-21	FERRITE 0UH	
FL1231	1-236-071-11	ENCAPSULATED COMPONENT	
FL1232	1-236-071-11	ENCAPSULATED COMPONENT	
FL1270	1-233-764-21	FILTER	
		< IC >	
IC1005	8-759-450-47	IC BA05T	
IC1006	8-759-640-19	IC PQ1CG2032FZ	
IC1007	8-759-640-19	IC PQ1CG2032FZ	
IC1008	8-752-072-94	IC CXA1875AM-T4	
IC1009	8-759-701-59	IC NJM78M09FA	
IC1010	8-759-640-19	IC PQ1CG2032FZ	
IC1011	8-759-450-47	IC BA05T	
IC1012	8-759-445-59	IC BA033T	
IC1102	8-759-712-65	IC PQ070XZ01ZP	
IC1201	8-759-544-25	IC TDA7482	
IC1202	8-759-333-24	IC LM1876TF	
IC1231	6-701-031-01	IC MSP3411G-QA-B10	
IC1270	8-759-701-36	IC NJM3403AM	
IC1402	8-752-100-26	IC CXA2150AQ-TL	
IC1701	8-759-696-71	IC STV9379A	
IC1801	8-759-665-11	IC LM393DT	
IC1802	8-759-998-98	IC LM358D	
IC1803	8-759-567-08	IC MB88141APF-ER	
IC1804	8-759-665-11	IC LM393DT	
IC1808	8-759-665-11	IC LM393DT	
IC1811	8-759-803-42	IC LA6500-FA	
IC1812	8-759-394-35	IC BA12T	
IC1950	8-759-803-42	IC LA6500-FA	
		< JUMPER RESISTOR >	
JR1006	1-216-864-11	SHORT CHIP 0	
JR1007	1-216-864-11	SHORT CHIP 0	
JR1238	1-216-295-91	SHORT CHIP 0	
		< COIL >	
L1003	1-414-934-21	INDUCTOR 10UH	
L1004	1-412-525-31	INDUCTOR 10UH	
L1005	1-412-525-31	INDUCTOR 10UH	
L1007	1-419-249-11	INDUCTOR 15UH	
L1008	1-419-249-11	INDUCTOR 15UH	
L1009	1-419-249-11	INDUCTOR 15UH	
L1010	1-419-249-11	INDUCTOR 15UH	
L1015	1-412-979-21	INDUCTOR 1UH	
L1016	1-412-979-21	INDUCTOR 1UH	
L1017	1-419-249-11	INDUCTOR 15UH	
L1018	1-419-249-11	INDUCTOR 15UH	
L1019	1-412-525-31	INDUCTOR 10UH	
L1100	1-414-934-21	INDUCTOR 10UH	
L1201	1-416-857-11	INDUCTOR 65UH	
L1202	1-414-158-11	INDUCTOR 2.2UH	
L1203	1-414-158-11	INDUCTOR 2.2UH	
L1233	1-414-934-21	INDUCTOR 10UH	
L1270	1-412-006-31	INDUCTOR 10UH	
L1272	1-408-615-31	INDUCTOR 100UH	
L1401	1-414-934-21	INDUCTOR 10UH	
L1402	1-414-934-21	INDUCTOR 10UH	
L1403	1-414-934-21	INDUCTOR 10UH	
L1404	1-414-934-21	INDUCTOR 10UH	
L1405	1-414-934-21	INDUCTOR 10UH	
L1406	1-414-934-21	INDUCTOR 10UH	
L1701	1-412-524-11	INDUCTOR 8.2UH	
L1801	1-416-920-11	INDUCTOR 10MH	
L1802	1-406-989-21	INDUCTOR 10MH	
L1803	1-414-934-21	INDUCTOR 10UH	

Note : The components identified by shading and marked ⚠ are critical for safety. Replace only with the part numbers specified in the parts list.

A

REF.NO.	PART.NO	DESCRIPTION	REMARK
		< PROTECTOR MODULE >	
PS1011 ⚠	1-801-549-21	PROTECTOR, MODULE MP250 4A	
PS1012 ⚠	1-801-549-21	PROTECTOR, MODULE MP250 4A	
		< TRANSISTOR >	
Q1001	8-729-901-81	TRANSISTOR 2SC2412K-T-146-R	
Q1002	8-729-901-81	TRANSISTOR 2SC2412K-T-146-R	
Q1003	8-729-027-38	TRANSISTOR DTA144EKA-T146	
Q1004	8-729-901-81	TRANSISTOR 2SC2412K-T-146-R	
Q1005	8-729-026-49	TRANSISTOR 2SA1037AK-T146-R	
Q1006	8-729-901-81	TRANSISTOR 2SC2412K-T-146-R	
Q1007	8-729-901-81	TRANSISTOR 2SC2412K-T-146-R	
Q1008	8-729-026-49	TRANSISTOR 2SA1037AK-T146-R	
Q1011	8-729-901-81	TRANSISTOR 2SC2412K-T-146-R	
Q1012	8-729-901-81	TRANSISTOR 2SC2412K-T-146-R	
Q1070	8-729-120-28	TRANSISTOR 2SC1623-L5L6	
Q1071	8-729-026-49	TRANSISTOR 2SA1037AK-T146-R	
Q1072	1-801-806-11	TRANSISTOR DTC144EKA	
Q1100	1-801-806-11	TRANSISTOR DTC144EKA	
Q1201	8-729-026-49	TRANSISTOR 2SA1037AK-T146-R	
Q1202	8-729-901-81	TRANSISTOR 2SC2412K-T-146-R	
Q1203	8-729-901-81	TRANSISTOR 2SC2412K-T-146-R	
Q1204	8-729-901-81	TRANSISTOR 2SC2412K-T-146-R	
Q1205	8-729-901-81	TRANSISTOR 2SC2412K-T-146-R	
Q1207	1-801-806-11	TRANSISTOR DTC144EKA	
Q1270	8-729-901-81	TRANSISTOR 2SC2412K-T-146-R	
Q1271	8-729-901-81	TRANSISTOR 2SC2412K-T-146-R	
Q1272	8-729-901-81	TRANSISTOR 2SC2412K-T-146-R	
Q1402	8-729-901-81	TRANSISTOR 2SC2412K-T-146-R	
Q1406	8-729-026-49	TRANSISTOR 2SA1037AK-T146-R	
Q1407	8-729-026-49	TRANSISTOR 2SA1037AK-T146-R	
Q1410	8-729-026-49	TRANSISTOR 2SA1037AK-T146-R	
Q1411	8-729-026-49	TRANSISTOR 2SA1037AK-T146-R	
Q1412	8-729-026-49	TRANSISTOR 2SA1037AK-T146-R	
Q1413	8-729-026-49	TRANSISTOR 2SA1037AK-T146-R	
Q1422	8-729-026-49	TRANSISTOR 2SA1037AK-T146-R	
Q1423	8-729-901-81	TRANSISTOR 2SC2412K-T-146-R	
Q1701	8-729-039-68	TRANSISTOR IRF620	
Q1801	8-729-901-81	TRANSISTOR 2SC2412K-T-146-R	
Q1802	1-801-806-11	TRANSISTOR DTC144EKA	
Q1803	8-729-901-81	TRANSISTOR 2SC2412K-T-146-R	
Q1804	8-729-901-81	TRANSISTOR 2SC2412K-T-146-R	
Q1805	8-729-140-93	TRANSISTOR 2SB733-34	
Q1809	8-729-046-33	TRANSISTOR IRF720-LF49	
Q1811	8-729-026-49	TRANSISTOR 2SA1037AK-T146-R	
Q1970	8-729-901-81	TRANSISTOR 2SC2412K-T-146-R	
Q1971	8-729-901-81	TRANSISTOR 2SC2412K-T-146-R	
Q1973	8-729-901-81	TRANSISTOR 2SC2412K-T-146-R	

REF.NO.	PART.NO	DESCRIPTION			REMARK
		< RESISTOR >			
R1007	1-216-833-11	RES-CHIP	10K	5%	1/10W
R1009	1-216-833-11	RES-CHIP	10K	5%	1/10W
R1011	1-216-833-11	RES-CHIP	10K	5%	1/10W
R1012	1-216-833-11	RES-CHIP	10K	5%	1/10W
R1013	1-216-824-11	RES-CHIP	1.8K	5%	1/10W
R1014	1-216-295-91	SHORT CHIP	0		
R1015	1-216-821-11	RES-CHIP	1K	5%	1/10W
R1016	1-216-809-11	RES-CHIP	100	5%	1/10W
R1018	1-216-817-11	RES-CHIP	470	5%	1/10W
R1019	1-216-817-11	RES-CHIP	470	5%	1/10W
R1020	1-216-817-11	RES-CHIP	470	5%	1/10W
R1021	1-216-841-11	RES-CHIP	47K	5%	1/10W
R1022	1-216-834-11	RES-CHIP	12K	5%	1/10W
R1023	1-218-867-11	METAL CHIP	6.8K	0.5%	1/10W
R1024	1-216-809-11	RES-CHIP	100	5%	1/10W
R1025	1-216-817-11	RES-CHIP	470	5%	1/10W
R1026	1-216-817-11	RES-CHIP	470	5%	1/10W
R1027	1-216-829-11	RES-CHIP	4.7K	5%	1/10W
R1028	1-216-797-11	RES-CHIP	10	5%	1/10W
R1029	1-216-817-11	RES-CHIP	470	5%	1/10W
R1030	1-216-818-11	RES-CHIP	560	5%	1/10W
R1033	1-216-829-11	RES-CHIP	4.7K	5%	1/10W
R1034	1-216-829-11	RES-CHIP	4.7K	5%	1/10W
R1035	1-216-650-11	METAL CHIP	910	0.5%	1/10W
R1036	1-218-847-11	METAL CHIP	1K	0.5%	1/10W
R1037	1-216-652-11	METAL CHIP	1.1K	0.5%	1/10W
R1038	1-218-851-11	METAL CHIP	1.5K	0.5%	1/10W
R1039	1-216-809-11	RES-CHIP	100	5%	1/10W
R1040	1-216-809-11	RES-CHIP	100	5%	1/10W
R1041	1-216-833-11	RES-CHIP	10K	5%	1/10W
R1042	1-216-809-11	RES-CHIP	100	5%	1/10W
R1043	1-216-809-11	RES-CHIP	100	5%	1/10W
R1044	1-216-809-11	RES-CHIP	100	5%	1/10W
R1045	1-216-809-11	RES-CHIP	100	5%	1/10W
R1046	1-216-809-11	RES-CHIP	100	5%	1/10W
R1047	1-216-864-11	SHORT CHIP	0		
R1048	1-216-295-91	SHORT CHIP	0		
R1049	1-216-809-11	RES-CHIP	100	5%	1/10W
R1050	1-216-809-11	RES-CHIP	100	5%	1/10W
R1051	1-218-837-11	METAL CHIP	390	0.5%	1/10W
R1052	1-218-847-11	METAL CHIP	1K	0.5%	1/10W
R1054	1-216-864-11	SHORT CHIP	0		
R1055	1-216-833-11	RES-CHIP	10K	5%	1/10W
R1057	1-218-867-11	METAL CHIP	6.8K	0.5%	1/10W
R1058	1-216-835-11	RES-CHIP	15K	5%	1/10W
R1059	1-216-829-11	RES-CHIP	4.7K	5%	1/10W
R1060	1-216-821-11	RES-CHIP	1K	5%	1/10W
R1063	1-216-864-11	SHORT CHIP	0		

REF.NO.	PART.NO	DESCRIPTION			REMARK
R1066	1-216-864-11	SHORT CHIP	0		
R1068	1-216-829-11	RES-CHIP	4.7K	5%	1/10W
R1069	1-216-829-11	RES-CHIP	4.7K	5%	1/10W
R1070	1-216-833-11	RES-CHIP	10K	5%	1/10W
R1071	1-216-833-11	RES-CHIP	10K	5%	1/10W
R1072	1-216-821-11	RES-CHIP	1K	5%	1/10W
R1073	1-216-833-11	RES-CHIP	10K	5%	1/10W
R1074	1-216-864-11	SHORT CHIP	0		
R1075	1-216-821-11	RES-CHIP	1K	5%	1/10W
R1076	1-216-829-11	RES-CHIP	4.7K	5%	1/10W
R1078	1-216-864-11	SHORT CHIP	0		
R1082	1-216-864-11	SHORT CHIP	0		
R1084	1-414-766-22	FERRITE	0UH		
R1085	1-414-766-22	FERRITE	0UH		
R1087	1-216-295-91	SHORT CHIP	0		
R1088	1-216-864-11	SHORT CHIP	0		
R1089	1-216-864-11	SHORT CHIP	0		
R1093	1-216-295-91	SHORT CHIP	0		
R1095	1-218-875-11	METAL CHIP	15K	0.5%	1/10W
R1096	1-216-864-11	SHORT CHIP	0		
R1097	1-216-864-11	SHORT CHIP	0		
R1099	1-216-864-11	SHORT CHIP	0		
R1100	1-216-833-11	RES-CHIP	10K	5%	1/10W
R1101	1-216-833-11	RES-CHIP	10K	5%	1/10W
R1102	1-216-809-11	RES-CHIP	100	5%	1/10W
R1103	1-216-864-11	SHORT CHIP	0		
R1104	1-216-864-11	SHORT CHIP	0		
R1107	1-216-864-11	SHORT CHIP	0		
R1114	1-216-864-11	SHORT CHIP	0		
R1117	1-216-864-11	SHORT CHIP	0		
R1118	1-216-864-11	SHORT CHIP	0		
R1119	1-216-864-11	SHORT CHIP	0		
R1120	1-216-864-11	SHORT CHIP	0		
R1121	1-216-864-11	SHORT CHIP	0		
R1122	1-216-864-11	SHORT CHIP	0		
R1123	1-216-864-11	SHORT CHIP	0		
R1124	1-216-864-11	SHORT CHIP	0		
R1127	1-216-864-11	SHORT CHIP	0		
R1130	1-216-864-11	SHORT CHIP	0		
R1131	1-216-833-11	RES-CHIP	10K	5%	1/10W
R1132	1-216-809-11	RES-CHIP	100	5%	1/10W
R1133	1-216-809-11	RES-CHIP	100	5%	1/10W
R1135	1-216-864-11	SHORT CHIP	0		
R1137	1-216-864-11	SHORT CHIP	0		
R1138	1-216-864-11	SHORT CHIP	0		
R1139	1-216-864-11	SHORT CHIP	0		
R1144	1-216-829-11	RES-CHIP	4.7K	5%	1/10W
R1145	1-216-650-11	METAL CHIP	910	0.5%	1/10W
R1146	1-216-661-11	METAL CHIP	2.7K	0.5%	1/10W
R1150	1-216-864-11	SHORT CHIP	0		
R1151	1-216-864-11	SHORT CHIP	0		
R1152	1-216-864-11	SHORT CHIP	0		
R1198	1-216-864-11	SHORT CHIP	0		
R1199	1-216-864-11	SHORT CHIP	0		
R1201	1-216-817-11	RES-CHIP	470	5%	1/10W
R1202	1-249-422-11	CARBON	2.7K	5%	1/4W
R1203	1-249-422-11	CARBON	2.7K	5%	1/4W
R1204	1-249-422-11	CARBON	2.7K	5%	1/4W
R1205	1-216-809-11	RES-CHIP	100	5%	1/10W
R1207	1-216-357-00	METAL OXIDE	4.7	5%	1W
R1208	1-216-825-11	RES-CHIP	2.2K	5%	1/10W
R1209	1-216-825-11	RES-CHIP	2.2K	5%	1/10W
R1210	1-216-841-11	RES-CHIP	47K	5%	1/10W
R1211	1-216-828-11	RES-CHIP	3.9K	5%	1/10W
R1212	1-216-828-11	RES-CHIP	3.9K	5%	1/10W
R1213	1-216-357-00	METAL OXIDE	4.7	5%	1W
R1214	1-216-296-11	SHORT CHIP	0		
R1215	1-216-631-11	METAL CHIP	150	0.5%	1/10W
R1216	1-216-837-11	RES-CHIP	22K	5%	1/10W
R1217	1-216-819-11	RES-CHIP	680	5%	1/10W
R1218	1-216-837-11	RES-CHIP	22K	5%	1/10W
R1219	1-216-819-11	RES-CHIP	680	5%	1/10W
R1220	1-216-833-11	RES-CHIP	10K	5%	1/10W
R1221	1-216-296-11	SHORT CHIP	0		
R1222	1-216-841-11	RES-CHIP	47K	5%	1/10W
R1223	1-216-841-11	RES-CHIP	47K	5%	1/10W
R1224	1-216-841-11	RES-CHIP	47K	5%	1/10W
R1225	1-216-838-11	RES-CHIP	27K	5%	1/10W
R1227	1-216-832-11	RES-CHIP	8.2K	5%	1/10W
R1229	1-216-829-11	RES-CHIP	4.7K	5%	1/10W
R1230	1-216-841-11	RES-CHIP	47K	5%	1/10W
R1232	1-216-833-11	RES-CHIP	10K	5%	1/10W
R1234	1-216-837-11	RES-CHIP	22K	5%	1/10W
R1237	1-249-401-11	CARBON	47	5%	1/4W
R1238	1-216-295-91	SHORT CHIP	0		
R1239	1-216-829-11	RES-CHIP	4.7K	5%	1/10W
R1240	1-216-829-11	RES-CHIP	4.7K	5%	1/10W
R1241	1-216-829-11	RES-CHIP	4.7K	5%	1/10W
R1242	1-216-841-11	RES-CHIP	47K	5%	1/10W
R1244	1-216-841-11	RES-CHIP	47K	5%	1/10W
R1246	1-216-864-11	SHORT CHIP	0		
R1248	1-216-864-11	SHORT CHIP	0		
R1256	1-216-829-11	RES-CHIP	4.7K	5%	1/10W
R1260	1-216-809-11	RES-CHIP	100	5%	1/10W
R1261	1-216-809-11	RES-CHIP	100	5%	1/10W
R1270	1-216-815-11	RES-CHIP	330	5%	1/10W
R1272	1-216-821-11	RES-CHIP	1K	5%	1/10W
R1273	1-218-867-11	METAL CHIP	6.8K	0.5%	1/10W
R1274	1-218-867-11	METAL CHIP	6.8K	0.5%	1/10W
R1275	1-216-821-11	RES-CHIP	1K	5%	1/10W

REF.NO.	PART.NO	DESCRIPTION			REMARK
R1276	1-216-821-11	RES-CHIP	1K	5%	1/10W
R1277	1-216-841-11	RES-CHIP	47K	5%	1/10W
R1278	1-216-841-11	RES-CHIP	47K	5%	1/10W
R1279	1-216-841-11	RES-CHIP	47K	5%	1/10W
R1280	1-218-899-11	METAL CHIP	150K	0.5%	1/16W
R1281	1-216-841-11	RES-CHIP	47K	5%	1/10W
R1283	1-216-841-11	RES-CHIP	47K	5%	1/10W
R1284	1-216-841-11	RES-CHIP	47K	5%	1/10W
R1286	1-216-841-11	RES-CHIP	47K	5%	1/10W
R1287	1-216-841-11	RES-CHIP	47K	5%	1/10W
R1288	1-216-818-11	RES-CHIP	560	5%	1/10W
R1289	1-218-867-11	METAL CHIP	6.8K	0.5%	1/10W
R1290	1-216-828-11	RES-CHIP	3.9K	5%	1/10W
R1293	1-216-864-11	SHORT CHIP	0		
R1297	1-216-864-11	SHORT CHIP	0		
R1406	1-216-833-11	RES-CHIP	10K	5%	1/10W
R1411	1-216-809-11	RES-CHIP	100	5%	1/10W
R1412	1-216-809-11	RES-CHIP	100	5%	1/10W
R1413	1-216-809-11	RES-CHIP	100	5%	1/10W
R1414	1-218-871-11	METAL CHIP	10K	0.5%	1/10W
R1416	1-216-835-11	RES-CHIP	15K	5%	1/10W
R1417	1-216-809-11	RES-CHIP	100	5%	1/10W
R1422	1-216-817-11	RES-CHIP	470	5%	1/10W
R1427	1-216-864-11	SHORT CHIP	0		
R1428	1-218-863-11	METAL CHIP	4.7K	0.5%	1/10W
R1434	1-216-825-11	RES-CHIP	2.2K	5%	1/10W
R1435	1-216-825-11	RES-CHIP	2.2K	5%	1/10W
R1437	1-216-809-11	RES-CHIP	100	5%	1/10W
R1441	1-216-295-91	SHORT CHIP	0		
R1443	1-216-809-11	RES-CHIP	100	5%	1/10W
R1444	1-216-863-11	RES-CHIP	3.3M	5%	1/10W
R1445	1-216-826-11	RES-CHIP	2.7K	5%	1/10W
R1447	1-216-827-11	RES-CHIP	3.3K	5%	1/10W
R1448	1-216-809-11	RES-CHIP	100	5%	1/10W
R1450	1-216-809-11	RES-CHIP	100	5%	1/10W
R1451	1-216-809-11	RES-CHIP	100	5%	1/10W
R1452	1-216-295-91	SHORT CHIP	0		
R1453	1-216-295-91	SHORT CHIP	0		
R1454	1-216-809-11	RES-CHIP	100	5%	1/10W
R1456	1-216-825-11	RES-CHIP	2.2K	5%	1/10W
R1457	1-216-809-11	RES-CHIP	100	5%	1/10W
R1459	1-216-809-11	RES-CHIP	100	5%	1/10W
R1460	1-216-809-11	RES-CHIP	100	5%	1/10W
R1461	1-216-809-11	RES-CHIP	100	5%	1/10W
R1462	1-216-809-11	RES-CHIP	100	5%	1/10W
R1463	1-216-809-11	RES-CHIP	100	5%	1/10W
R1464	1-216-829-11	RES-CHIP	4.7K	5%	1/10W
R1466	1-216-833-11	RES-CHIP	10K	5%	1/10W
R1468	1-216-864-11	SHORT CHIP	0		
R1469	1-216-809-11	RES-CHIP	100	5%	1/10W
R1470	1-216-809-11	RES-CHIP	100	5%	1/10W
R1471	1-216-821-11	RES-CHIP	1K	5%	1/10W
R1472	1-218-271-11	RES-CHIP	2K	5%	1/10W
R1473	1-216-809-11	RES-CHIP	100	5%	1/10W
R1483	1-216-809-11	RES-CHIP	100	5%	1/10W
R1486	1-218-867-11	METAL CHIP	6.8K	0.5%	1/10W
R1487	1-216-821-11	RES-CHIP	1K	5%	1/10W
R1488	1-216-821-11	RES-CHIP	1K	5%	1/10W
R1489	1-216-833-11	RES-CHIP	10K	5%	1/10W
R1490	1-216-833-11	RES-CHIP	10K	5%	1/10W
R1491	1-216-821-11	RES-CHIP	1K	5%	1/10W
R1493	1-216-845-11	RES-CHIP	100K	5%	1/10W
R1494	1-216-821-11	RES-CHIP	1K	5%	1/10W
R1495	1-218-889-11	METAL CHIP	56K	0.5%	1/10W
R1496	1-216-821-11	RES-CHIP	1K	5%	1/10W
R1497	1-216-821-11	RES-CHIP	1K	5%	1/10W
R1499	1-216-818-11	RES-CHIP	560	5%	1/10W
R1500	1-216-864-11	SHORT CHIP	0		
R1501	1-216-829-11	RES-CHIP	4.7K	5%	1/10W
R1505	1-216-864-11	SHORT CHIP	0		
R1506	1-216-864-11	SHORT CHIP	0		
R1507	1-216-864-11	SHORT CHIP	0		
R1508	1-216-821-11	RES-CHIP	1K	5%	1/10W
R1509	1-216-821-11	RES-CHIP	1K	5%	1/10W
R1510	1-216-821-11	RES-CHIP	1K	5%	1/10W
R1519	1-216-864-11	SHORT CHIP	0		
R1520	1-216-864-11	SHORT CHIP	0		
R1521	1-216-864-11	SHORT CHIP	0		
R1522	1-216-864-11	SHORT CHIP	0		
R1705	1-249-383-11	CARBON	1.5	5%	1/4W
R1706	1-249-389-11	CARBON	4.7	5%	1/4W
R1707	1-247-791-91	CARBON	22	5%	1/4W
R1708	1-215-913-11	METAL OXIDE	220	5%	3W
R1709	1-214-798-21	METAL	1.8	1%	1/2W
R1710	1-216-827-11	RES-CHIP	3.3K	5%	1/10W
R1711	1-214-798-21	METAL	1.8	1%	1/2W
R1801	1-216-841-11	RES-CHIP	47K	5%	1/10W
R1802	1-216-825-11	RES-CHIP	2.2K	5%	1/10W
R1803	1-216-845-11	RES-CHIP	100K	5%	1/10W
R1804	1-216-833-11	RES-CHIP	10K	5%	1/10W
R1805	1-216-845-11	RES-CHIP	100K	5%	1/10W
R1806	1-216-817-11	RES-CHIP	470	5%	1/10W
R1807	1-208-806-11	METAL CHIP	10K	0.5%	1/10W
R1809	1-216-833-11	RES-CHIP	10K	5%	1/10W
R1811	1-216-825-11	RES-CHIP	2.2K	5%	1/10W
R1812	1-218-875-11	METAL CHIP	15K	0.5%	1/10W
R1813	1-218-875-11	METAL CHIP	15K	0.5%	1/10W
R1814	1-218-867-11	METAL CHIP	6.8K	0.5%	1/10W
R1815	1-216-833-11	RES-CHIP	10K	5%	1/10W
R1816	1-216-809-11	RES-CHIP	100	5%	1/10W

REF.NO.	PART.NO	DESCRIPTION			REMARK
R1817	1-216-809-11	RES-CHIP	100	5%	1/10W
R1819	1-216-809-11	RES-CHIP	100	5%	1/10W
R1820	1-216-809-11	RES-CHIP	100	5%	1/10W
R1821	1-216-809-11	RES-CHIP	100	5%	1/10W
R1823	1-216-809-11	RES-CHIP	100	5%	1/10W
R1825	1-216-809-11	RES-CHIP	100	5%	1/10W
R1826	1-218-895-11	METAL CHIP	100K	0.5%	1/10W
R1828	1-216-864-11	SHORT CHIP	0		
R1829	1-216-821-11	RES-CHIP	1K	5%	1/10W
R1830	1-216-295-91	SHORT CHIP	0		
R1831	1-216-842-11	RES-CHIP	56K	5%	1/10W
R1835	1-216-813-11	RES-CHIP	220	5%	1/10W
R1838	1-216-827-11	RES-CHIP	3.3K	5%	1/10W
R1839	1-218-875-11	METAL CHIP	15K	0.5%	1/10W
R1840	1-216-821-11	RES-CHIP	1K	5%	1/10W
R1841	1-216-811-11	RES-CHIP	150	5%	1/10W
R1842	1-216-811-11	RES-CHIP	150	5%	1/10W
R1843	1-216-811-11	RES-CHIP	150	5%	1/10W
R1844	1-216-833-11	RES-CHIP	10K	5%	1/10W
R1847	1-216-809-11	RES-CHIP	100	5%	1/10W
R1848	1-216-809-11	RES-CHIP	100	5%	1/10W
R1852	1-215-906-11	METAL OXIDE	15	5%	3W
R1854	1-216-853-11	RES-CHIP	470K	5%	1/10W
R1855	1-208-794-11	METAL CHIP	3.3K	0.5%	1/10W
R1856	1-216-849-11	RES-CHIP	220K	5%	1/10W
R1861	1-208-798-11	METAL CHIP	4.7K	0.5%	1/10W
R1876	1-218-873-11	METAL CHIP	12K	0.5%	1/10W
R1879	1-208-804-11	METAL CHIP	8.2K	0.5%	1/10W
R1882	1-208-790-11	METAL CHIP	2.2K	0.5%	1/10W
R1886	1-216-837-11	RES-CHIP	22K	5%	1/10W
R1890	1-216-825-11	RES-CHIP	2.2K	5%	1/10W
R1898	1-208-806-11	METAL CHIP	10K	0.5%	1/10W
R1900	1-216-864-11	SHORT CHIP	0		
R1905	1-218-756-11	METAL CHIP	150K	0.5%	1/10W
R1906	1-208-782-11	METAL CHIP	1K	0.5%	1/10W
R1908	1-216-825-11	RES-CHIP	2.2K	5%	1/10W
R1909	1-208-798-11	METAL CHIP	4.7K	0.5%	1/10W
R1911	1-218-760-11	METAL CHIP	220K	0.5%	1/10W
R1916	1-216-353-00	METAL OXIDE	2.2	5%	1W
R1930	1-216-825-11	RES-CHIP	2.2K	5%	1/10W
R1931	1-216-864-11	SHORT CHIP	0		
R1933	1-216-837-11	RES-CHIP	22K	5%	1/10W
R1934	1-216-821-11	RES-CHIP	1K	5%	1/10W
R1935	1-216-833-11	RES-CHIP	10K	5%	1/10W
R1936	1-216-829-11	RES-CHIP	4.7K	5%	1/10W
R1950	1-218-888-11	METAL CHIP	51K	0.5%	1/10W
R1951	1-218-853-11	METAL CHIP	1.8K	0.5%	1/10W
R1952	1-218-867-11	METAL CHIP	6.8K	0.5%	1/10W
R1953	1-215-867-00	METAL OXIDE	470	5%	1W
R1954	1-249-395-11	CARBON	15	5%	1/4W
R1955	1-216-818-11	RES-CHIP	560	5%	1/10W
R1956	1-249-383-11	CARBON	1.5	5%	1/4W
R1957	1-249-381-11	CARBON	1	5%	1/4W
R1966	1-216-855-11	RES-CHIP	680K	5%	1/10W
R1971	1-216-825-11	RES-CHIP	2.2K	5%	1/10W
R1972	1-216-829-11	RES-CHIP	4.7K	5%	1/10W
R1973	1-216-825-11	RES-CHIP	2.2K	5%	1/10W
R1975	1-216-833-11	RES-CHIP	10K	5%	1/10W
R1976	1-216-846-11	RES-CHIP	120K	5%	1/10W
R1977	1-216-839-11	RES-CHIP	33K	5%	1/10W
R1978	1-216-833-11	RES-CHIP	10K	5%	1/10W
R1979	1-216-833-11	RES-CHIP	10K	5%	1/10W
R1982	1-216-837-11	RES-CHIP	22K	5%	1/10W
R1983	1-216-849-11	RES-CHIP	220K	5%	1/10W
R1984	1-216-833-11	RES-CHIP	10K	5%	1/10W
R1985	1-216-841-11	RES-CHIP	47K	5%	1/10W
R1987	1-218-871-11	METAL CHIP	10K	0.5%	1/10W
R1988	1-218-887-11	METAL CHIP	47K	0.5%	1/10W
R1989	1-218-871-11	METAL CHIP	10K	0.5%	1/10W
R1990	1-216-839-11	RES-CHIP	33K	5%	1/10W
R1995	1-216-843-11	RES-CHIP	68K	5%	1/10W
		< THERMISTOR >			
TH1701	1-800-193-00	THERMISTOR			
		< CRYSTAL >			
X1231	1-781-148-21	VIBRATOR, CRYSTAL			
X1401	1-760-895-21	VIBRATOR, CERAMIC			

A Board Variant Parts KV-32FQ80

		< CAPACITOR >			
C1813	NOT FITTED				
C1820	NOT FITTED				
C1821	NOT FITTED				
C1823	NOT FITTED				
C1824	NOT FITTED				
C1825	NOT FITTED				
C1826	NOT FITTED				
C1828	NOT FITTED				
C1829	NOT FITTED				
C1830	NOT FITTED				
C1831	NOT FITTED				
C1833	1-136-347-11	FILM	0.0047UF	5.00%	630
C1838	NOT FITTED				
C1840	NOT FITTED				
C1841	NOT FITTED				
C1842	NOT FITTED				
C1847	NOT FITTED				

REF.NO.	PART.NO	DESCRIPTION			REMARK
C1851	NOT FITTED				
C1858	NOT FITTED				
	< CONNECTOR >				
CN1902	NOT FITTED				
CP1100	1-251-658-11	SPLITTER RF			
	< DIODE >				
D1814	NOT FITTED				
D1816	NOT FITTED				
D1901	8-216-295-91	SHORT CHIP 0			
	< IC >				
IC1806	NOT FITTED				
IC1809	NOT FITTED				
	< TRANSISTOR >				
Q1806	NOT FITTED				
Q1807	NOT FITTED				
Q1808	NOT FITTED				
Q1812	NOT FITTED				
Q1813	NOT FITTED				
Q1972	NOT FITTED				
	< RESISTOR >				
R1079	NOT FITTED				
R1492	1-216-830-11	RES-CHIP	5.6K	5%	1/10W
R1701	1-208-801-11	METAL CHIP	6.2K	0.5%	1/10W
R1702	1-208-801-11	METAL CHIP	6.2K	0.5%	1/10W
R1703	1-216-665-11	METAL CHIP	3.9K	0.5%	1/10W
R1704	1-216-665-11	METAL CHIP	3.9K	0.5%	1/10W
R1714	1-218-344-11	RES-CHIP	7.5K	5%	1/10W
R1721	1-216-844-11	RES-CHIP	82K	5%	1/10W
R1722	1-216-833-11	RES-CHIP	10K	5%	1/10W
R1723	1-216-836-11	RES-CHIP	18K	5%	1/10W
R1834	NOT FITTED				
R1846	NOT FITTED				
R1853	NOT FITTED				
R1862	NOT FITTED				
R1863	NOT FITTED				
R1864	NOT FITTED				
R1865	NOT FITTED				
R1867	NOT FITTED				
R1868	NOT FITTED				
R1869	NOT FITTED				
R1870	1-216-825-11	RES-CHIP	2.2K	5%	1/10W
R1871	NOT FITTED				
R1872	NOT FITTED				
R1874	NOT FITTED				
R1880	NOT FITTED				
R1883	NOT FITTED				
R1888	NOT FITTED				
R1891	NOT FITTED				
R1892	NOT FITTED				
R1893	NOT FITTED				
R1894	NOT FITTED				
R1897	NOT FITTED				
R1899	NOT FITTED				
R1904	NOT FITTED				
R1910	NOT FITTED				
R1912	NOT FITTED				
R1914	NOT FITTED				
R1915	NOT FITTED				
R1918	NOT FITTED				
R1919	NOT FITTED				
R1922	NOT FITTED				
R1924	NOT FITTED				
R1925	NOT FITTED				
R1928	NOT FITTED				
R1929	NOT FITTED				
R1966	NOT FITTED				
R1967	1-216-847-11	METAL CHIP	150K	5%	1/10W
R1968	1-218-887-11	METAL CHIP	47K	0.5%	1/10W
R1970	NOT FITTED				
R1974	NOT FITTED				
R1986	1-216-841-11	RES-CHIP	47K	5%	1/10W
R1988	1-218-887-11	METAL CHIP	47K	0.5%	1/10W
	< TUNER >				
TU1001	8-598-536-20	FRONTEND BTF-EF412 (KV-32FQ80B)			
TU1001	8-598-534-10	FRONTEND BTF-EC412 (KV-32FQ80E/32FQ80K)			
TU1001	8-598-530-10	FRONTEND BTF-EU612 (KV-32FQ80U)			

A Board Variant Parts KV-36FQ80

	< CAPACITOR >				
C1813	1-102-106-00	CERAMIC	100PF	10.00%	50V
C1820	1-136-177-00	FILM	1UF	5.00%	50V
C1821	1-126-965-91	ELECT	22UF	20.00%	50V
C1823	1-136-177-00	FILM	1UF	5.00%	50V
C1824	1-164-222-91	CERAMIC CHIP	0.22UF		25V
C1825	1-164-222-91	CERAMIC CHIP	0.22UF		25V
C1826	1-126-947-11	ELECT	47UF	20.00%	35V
C1828	1-163-127-00	CERAMIC CHIP	270PF	5.00%	50V
C1829	1-164-336-11	CERAMIC CHIP	0.33UF		25V
C1830	1-115-339-11	CERAMIC CHIP	0.1UF	10.00%	50V
C1831	1-102-106-00	CERAMIC	100PF	10.00%	50V
C1833	1-136-558-11	FILM	0.0039UF	5.00%	630V

REF.NO.	PART.NO	DESCRIPTION	REMARK
C1838	1-163-989-11	CERAMIC CHIP 0.033UF	10.00% 25V
C1840	1-130-467-00	MYLAR 470PF	5.00% 50V
C1841	1-163-989-11	CERAMIC CHIP 0.033UF	10.00% 25V
C1842	1-162-968-11	CERAMIC CHIP 0.0047UF	10.00% 50V
C1847	1-126-947-11	ELECT 47UF	20.00% 35V
C1851	1-136-165-00	FILM 0.1UF	5.00% 50V
C1858	1-162-923-11	CERAMIC CHIP 47PF	5.00% 50V
		< CONNECTOR >	
CN1902	*1-564-506-11	PLUG, CONNECTOR 3P	
CP1100	1-417-290-11	RF SPLITTER	
		< DIODE >	
D1814	8-719-914-43	DIODE DAN202K	
D1816	8-719-911-19	DIODE 1SS119-25	
D1901	1-216-864-11	SHORT CHIP 0	
		< IC >	
IC1806	8-759-595-52	IC CXA8070AP	
IC1809	8-759-903-16	IC LM318P	
		< TRANSISTOR >	
Q1806	8-729-026-49	TRANSISTOR 2SA1037AK-T146-R	
Q1807	8-729-901-81	TRANSISTOR 2SC2412K-T-146-R	
Q1808	8-729-901-81	TRANSISTOR 2SC2412K-T-146-R	
Q1812	8-729-045-04	TRANSISTOR 2SC5511	
Q1813	8-729-017-05	TRANSISTOR 2SA1837	
Q1972	8-729-901-81	TRANSISTOR 2SC2412K-T-146-R	
		< RESISTOR >	
R1079	1-216-841-11	RES-CHIP 47K 5%	1/10W
R1492	1-216-833-11	RES-CHIP 10K 5%	1/10W
R1701	1-208-800-11	METAL CHIP 5.6K 0.5%	1/10W
R1702	1-208-800-11	METAL CHIP 5.6K 0.5%	1/10W
R1703	1-208-794-11	METAL CHIP 3.3K 0.5%	1/10W
R1704	1-208-794-11	METAL CHIP 3.3K 0.5%	1/10W
R1714	1-216-826-11	RES-CHIP 2.7K 5%	1/10W
R1721	1-216-843-11	RES-CHIP 68K 5%	1/10W
R1722	1-216-832-11	RES-CHIP 8.2K 5%	1/10W
R1723	1-216-838-11	RES-CHIP 27K 5%	1/10W
R1834	1-216-841-11	RES-CHIP 47K 5%	1/10W
R1846	1-216-825-11	RES-CHIP 2.2K 5%	1/10W
R1853	1-216-821-11	RES-CHIP 1K 5%	1/10W
R1862	1-216-827-11	RES-CHIP 3.3K 5%	1/10W
R1863	1-216-825-11	RES-CHIP 2.2K 5%	1/10W
R1864	1-216-827-11	RES-CHIP 3.3K 5%	1/10W
R1865	1-216-825-11	RES-CHIP 2.2K 5%	1/10W
R1867	1-216-845-11	RES-CHIP 100K 5%	1/10W
R1868	1-216-845-11	RES-CHIP 100K 5%	1/10W
R1869	1-260-321-71	CARBON 270 5%	1/2W
R1870	1-216-822-11	RES-CHIP 1.2K 5%	1/10W
R1871	1-216-809-11	RES-CHIP 100 5%	1/10W
R1872	1-216-809-11	RES-CHIP 100 5%	1/10W
R1874	1-216-821-11	RES-CHIP 1K 5%	1/10W
R1880	1-216-847-11	RES-CHIP 150K 5%	1/10W
R1883	1-216-821-11	RES-CHIP 1K 5%	1/10W
R1888	1-216-850-11	RES-CHIP 270K 5%	1/10W
R1891	1-216-641-11	METAL CHIP 390 0.5%	1/10W
R1892	1-208-790-11	METAL CHIP 2.2K 0.5%	1/10W
R1893	1-218-871-11	METAL CHIP 10K 0.5%	1/10W
R1894	1-216-829-11	RES-CHIP 4.7K 5%	1/10W
R1897	1-216-845-11	RES-CHIP 100K 5%	1/10W
R1899	1-216-821-11	RES-CHIP 1K 5%	1/10W
R1904	1-218-859-11	METAL CHIP 3.3K 0.5%	1/10W
R1910	1-216-833-11	RES-CHIP 10K 5%	1/10W
R1912	1-218-867-11	METAL CHIP 6.8K 0.5%	1/10W
R1914	1-216-809-11	RES-CHIP 100 5%	1/10W
R1915	1-216-827-11	RES-CHIP 3.3K 5%	1/10W
R1918	1-216-825-11	RES-CHIP 2.2K 5%	1/10W
R1919	1-216-825-11	RES-CHIP 2.2K 5%	1/10W
R1922	1-218-871-11	METAL CHIP 10K 0.5%	1/10W
R1924	1-212-849-00	FUSIBLE 4.7 5%	1/4W
R1925	1-212-849-00	FUSIBLE 4.7 5%	1/4W
R1928	1-215-886-11	METAL OXIDE 100 5%	2W
R1929	1-216-393-00	METAL OXIDE 2.2 5%	3W
R1966	1-216-855-11	RES-CHIP 680K 5%	1/10W
R1967	1-216-844-11	METAL CHIP 82K 5%	1/10W
R1968	1-218-885-11	METAL CHIP 39K 0.5%	1/10W
R1970	1-216-829-11	RES-CHIP 4.7K 5%	1/10W
R1974	1-216-825-11	RES-CHIP 2.2K 5%	1/10W
R1986	1-216-843-11	RES-CHIP 68K 5%	1/10W
R1988	1-218-891-11	METAL CHIP 68K 0.5%	1/10W
		< TUNER >	
TU1001	8-598-536-20	FRONTEND BTF-EF412 (KV-36FQ80B)	
TU1001	8-598-534-01	FRONTEND BTF-EC412 (KV-36FQ80E/36FQ80K)	

*A-1401-264-A C1 Board, Complete

	4-382-854-01	SCREW (M3X8), P, SW (+)	
		< CAPACITOR >	
C9004	1-115-350-51	CERAMIC 0.0047UF	2KV
C9009	1-163-241-11	CERAMIC CHIP 39PF	5.00% 50V
C9010	1-163-241-11	CERAMIC CHIP 39PF	5.00% 50V
C9011	1-161-830-00	CERAMIC 0.0047UF	500V
C9012	1-161-830-00	CERAMIC 0.0047UF	500V
C9014	1-161-830-00	CERAMIC 0.0047UF	500V

Note : The components identified by shading and marked ⚠ are critical for safety. Replace only with the part numbers specified in the parts list.

C1

REF.NO.	PART.NO	DESCRIPTION	REMARK
C9015	1-163-241-11	CERAMIC CHIP 39PF	5.00% 50V
C9016	1-535-143-71	LEAD,JUMPER (7.5MM)	
C9017	*1-537-864-11	PIN, POST	
C9018	1-107-961-91	ELECT 10UF	20.00% 250V
C9019	1-164-004-11	CERAMIC CHIP 0.1UF	10.00% 25V
C9020	1-107-961-91	ELECT 10UF	20.00% 250V
C9021	1-107-961-91	ELECT 10UF	20.00% 250V
C9022	1-101-004-00	CERAMIC 0.01UF	50V
C9023	1-101-004-00	CERAMIC 0.01UF	50V
C9024	1-164-004-11	CERAMIC CHIP 0.1UF	10.00% 25V
C9025	1-104-653-11	ELECT 220UF	20.00% 16V
C9026	1-164-004-11	CERAMIC CHIP 0.1UF	10.00% 25V
C9027	1-101-004-00	CERAMIC 0.01UF	50V
C9031	1-115-350-51	CERAMIC 0.0047UF	2KV
C9032	1-162-116-00	CERAMIC 680PF	10.00% 2KV
C9033	1-107-662-11	ELECT 22UF	20.00% 350V
C9042	1-126-940-11	ELECT 330UF	20.00% 25V
C9044	1-126-934-11	ELECT 220UF	20.00% 16V
C9045	1-164-004-11	CERAMIC CHIP 0.1UF	10.00% 25V
C9048	1-164-004-11	CERAMIC CHIP 0.1UF	10.00% 25V
C9049	1-164-004-11	CERAMIC CHIP 0.1UF	10.00% 25V
C9050	1-164-004-11	CERAMIC CHIP 0.1UF	10.00% 25V
C9051	1-535-303-00	LEAD,JUMPER (5.0MM)	
		< CONNECTOR >	
CN9001	*1-564-511-11	PLUG, CONNECTOR 8P	
CN9002	*1-564-508-11	PLUG, CONNECTOR 5P	
CN9004	1-695-915-11	TAB (CONTACT)	
CN9009	1-695-915-11	TAB (CONTACT)	
		< DIODE >	
D9005	8-719-404-50	DIODE MA111-TX	
D9006	8-719-051-85	DIODE HSS83TD	
D9007	8-719-051-85	DIODE HSS83TD	
D9008	8-719-051-85	DIODE HSS83TD	
D9009	8-719-908-03	DIODE GP08D	
D9010	8-719-110-17	DIODE RD10ESB2	
D9021	8-719-914-42	DIODE DA204K	
D9022	8-719-914-42	DIODE DA204K	
		< IC >	
IC9001	8-759-680-01	IC TDA6120Q/N2/S1	
IC9002	8-759-680-01	IC TDA6120Q/N2/S1	
IC9003	8-759-680-01	IC TDA6120Q/N2/S1	
		< SOCKET >	
J9002 ⚠	1-251-732-11	SOCKET, CRT	

REF.NO.	PART.NO	DESCRIPTION	REMARK
		< COIL >	
L9001	1-535-143-61	LEAD, JUMPER (5.0MM)	
L9002	1-408-399-00	INDUCTOR 1.5UH	
L9003	1-408-592-11	INDUCTOR 1.2UH	
L9004	1-408-592-11	INDUCTOR 1.2UH	
L9005	1-406-666-21	INDUCTOR 150UH	
L9006	1-412-526-11	INDUCTOR 12UH	
NL9001	1-535-143-61	LEAD, JUMPER (5.0MM)	
NL9002	1-535-143-61	LEAD, JUMPER (5.0MM)	
		< TRANSISTOR >	
Q9001	8-729-120-28	TRANSISTOR 2SC1623-L5L6	
Q9007	8-729-141-73	TRANSISTOR 2SC3624A-T1L15L16	
Q9009	8-729-424-02	TRANSISTOR 2SB709A-QRS-TX	
Q9010	8-729-424-02	TRANSISTOR 2SB709A-QRS-TX	
Q9011	8-729-424-02	TRANSISTOR 2SB709A-QRS-TX	
Q9013	8-729-141-73	TRANSISTOR 2SC3624A-T1L15L16	
Q9015	8-729-141-73	TRANSISTOR 2SC3624A-T1L15L16	
		< RESISTOR >	
R9001	1-216-633-11	METAL CHIP 180 0.5% 1/10W	
R9003	1-535-143-61	LEAD, JUMPER (5.0MM)	
R9006	1-249-429-11	CARBON 10K 5% 1/4W	
R9007	1-216-653-11	METAL CHIP 1.2K 0.5% 1/10W	
R9008	1-216-085-91	RES-CHIP 33K 5% 1/10W	
R9012	1-535-303-00	LEAD, JUMPER (5.0MM)	
R9017	1-535-303-00	LEAD, JUMPER (5.0MM)	
R9018	1-216-633-11	METAL CHIP 180 0.5% 1/10W	
R9019	1-216-633-11	METAL CHIP 180 0.5% 1/10W	
R9020	1-216-025-11	RES-CHIP 100 5% 1/10W	
R9021	1-216-103-00	RES-CHIP 180K 5% 1/10W	
R9022	1-216-073-91	RES-CHIP 10K 5% 1/10W	
R9023	1-216-103-00	RES-CHIP 180K 5% 1/10W	
R9024	1-535-303-00	LEAD, JUMPER (5.0MM)	
R9025	1-216-025-11	RES-CHIP 100 5% 1/10W	
R9026	1-216-653-11	METAL CHIP 1.2K 0.5% 1/10W	
R9027	1-216-103-00	RES-CHIP 180K 5% 1/10W	
R9028	1-216-103-00	RES-CHIP 180K 5% 1/10W	
R9029	1-216-073-91	RES-CHIP 10K 5% 1/10W	
R9030	1-216-073-91	RES-CHIP 10K 5% 1/10W	
R9031	1-216-653-11	METAL CHIP 1.2K 0.5% 1/10W	
R9032	1-216-103-00	RES-CHIP 180K 5% 1/10W	
R9033	1-215-435-00	METAL 3.9K 1% 1/4W	
R9034	1-215-428-00	METAL 2K 1% 1/4W	
R9035	1-216-103-00	RES-CHIP 180K 5% 1/10W	
R9036	1-216-083-00	RES-CHIP 27K 5% 1/10W	
R9037	1-215-926-00	METAL OXIDE 33K 5% 3W	
R9038	1-535-303-00	LEAD, JUMPER (5.0MM)	

REF.NO.	PART.NO	DESCRIPTION	REMARK
R9039	1-216-025-11	RES-CHIP 100 5%	1/10W
R9040	1-535-143-31	LEAD, JUMPER (15.0MM)	
R9041	1-216-083-00	RES-CHIP 27K 5%	1/10W
R9042	1-216-083-00	RES-CHIP 27K 5%	1/10W
R9043	1-215-926-00	METAL OXIDE 33K 5%	3W
R9044	1-215-926-00	METAL OXIDE 33K 5%	3W
R9045	1-535-143-61	LEAD, JUMPER (5.0MM)	
R9046	1-535-303-00	LEAD, JUMPER (5.0MM)	
R9047	1-202-557-00	SOLID 220 20%	1/2W
R9048	1-216-049-11	RES-CHIP 1K 5%	1/10W
R9049	1-216-049-11	RES-CHIP 1K 5%	1/10W
R9051	1-202-557-00	SOLID 220 20%	1/2W
R9052	1-202-557-00	SOLID 220 20%	1/2W
R9056	1-202-549-00	SOLID 100 20%	1/2W
R9057	1-202-847-00	SOLID 560K 20%	1/2W
R9059	1-202-818-00	SOLID 1K 20%	1/2W
R9061	1-202-549-00	SOLID 100 20%	1/2W
R9069	1-535-143-31	LEAD, JUMPER (15.0MM)	
R9070	1-247-807-31	CARBON 100 5%	1/4W
R9071	1-247-807-31	CARBON 100 5%	1/4W
R9072	1-247-807-31	CARBON 100 5%	1/4W
R9073	1-216-049-11	RES-CHIP 1K 5%	1/10W
R9092	1-216-295-91	SHORT CHIP 0	
R9094	1-216-295-91	SHORT CHIP 0	
R9095	1-216-295-91	SHORT CHIP 0	
R9098	1-535-143-61	LEAD, JUMPER (5.0MM)	
R9099	1-535-143-61	LEAD, JUMPER (5.0MM)	
R9100	1-535-143-61	LEAD, JUMPER (5.0MM)	
R9101	1-535-143-61	LEAD, JUMPER (5.0MM)	
		< RESISTOR VARIABLE >	
RV9001	1-241-714-11	RES, ADJ, METAL FILM 110M	
		< SPARK GAP >	
SG9003	1-519-421-11	GAP, DISCHARGE	

*A-1401-265-A H Board, Complete

REF.NO.	PART.NO	DESCRIPTION	REMARK
		< CAPACITOR >	
C300	1-107-826-11	CERAMIC CHIP 0.1UF	10.00% 16V
C301	1-162-947-11	CERAMIC CHIP 33PF	5.00% 50V
C302	1-162-927-11	CERAMIC CHIP 100PF	5.00% 50V
C303	1-126-947-11	ELECT 47UF	20.00% 35V
C305	1-126-947-11	ELECT 47UF	20.00% 35V
		< CONNECTOR >	
CN300	*1-564-510-11	PLUG, CONNECTOR 7P	
CN301	*1-564-507-11	PLUG, CONNECTOR 4P	
CN302	*1-564-511-11	PLUG, CONNECTOR 8P	
		< DIODE >	
D300	8-719-978-33	DIODE DTZ-TT11-6.8B	
D301	8-719-069-54	DIODE UDZSTE-175.1B	
D302	8-719-914-43	DIODE DAN202K	
D303	8-719-069-54	DIODE UDZSTE-175.1B	
D304	8-719-069-54	DIODE UDZSTE-175.1B	
D305	8-719-069-54	DIODE UDZSTE-175.1B	
D306	8-719-069-54	DIODE UDZSTE-175.1B	
D307	8-719-069-54	DIODE UDZSTE-175.1B	
D308	8-719-083-60	DIODE UDZSTE-174.7B	
		< IC >	
IC300	8-752-412-99	IC CXD2088Q-T4	
		< TRANSISTOR >	
Q300	8-729-120-28	TRANSISTOR 2SC1623-L5L6	
		< RESISTOR >	
R300	1-216-833-11	RES-CHIP 10K 5%	1/10W
R301	1-216-809-11	RES-CHIP 100 5%	1/10W
R302	1-216-809-11	RES-CHIP 100 5%	1/10W
R304	1-216-809-11	RES-CHIP 100 5%	1/10W
R305	1-216-813-11	RES-CHIP 220 5%	1/10W
R306	1-216-864-11	SHORT CHIP 0	
R307	1-216-809-11	RES-CHIP 100 5%	1/10W
R308	1-216-809-11	RES-CHIP 100 5%	1/10W
R309	1-216-829-11	RES-CHIP 4.7K 5%	1/10W
R310	1-216-809-11	RES-CHIP 100 5%	1/10W
R311	1-216-809-11	RES-CHIP 100 5%	1/10W
R312	1-216-817-11	RES-CHIP 470 5%	1/10W
R313	1-216-809-11	RES-CHIP 100 5%	1/10W
R314	1-216-809-11	RES-CHIP 100 5%	1/10W
R315	1-216-809-11	RES-CHIP 100 5%	1/10W
R316	1-216-825-11	RES-CHIP 2.2K 5%	1/10W
R317	1-216-825-11	RES-CHIP 2.2K 5%	1/10W
R318	1-216-825-11	RES-CHIP 2.2K 5%	1/10W
R319	1-216-825-11	RES-CHIP 2.2K 5%	1/10W
R320	1-216-825-11	RES-CHIP 2.2K 5%	1/10W
R321	1-216-825-11	RES-CHIP 2.2K 5%	1/10W
R322	1-216-864-11	SHORT CHIP 0	
R323	1-216-838-11	RES-CHIP 27K 5%	1/10W
R324	1-216-833-11	RES-CHIP 10K 5%	1/10W
		< CRYSTAL >	
X300	1-579-126-11	VIBRATOR, CERAMIC	

Note : The components identified by shading and marked ⚠ are critical for safety. Replace only with the part numbers specified in the parts list.

REF.NO.	PART.NO	DESCRIPTION	REMARK
***A-1401-339-A**		**F3 Board, Complete(KV-32FQ80)**	
***A-1401-053-A**		**F3 Board, Complete(KV-36FQ80)**	
	4-205-711-01	HOLDER, LED	
	*4-374-846-01	COVER, CAPACITOR, CAP TYPE	

F3 Board Common Parts

REF.NO.	PART.NO	DESCRIPTION	REMARK
		< CAPACITOR >	
C2150	1-126-969-11	ELECT 220UF	20.00% 50V
C2601	1-113-924-11	CERAMIC 0.0047UF	20.00% 250V
		< CONNECTOR >	
CN2151	*1-564-507-11	PLUG, CONNECTOR 4P	
CN2601 ⚠	*1-580-844-11	PIN, CONNECTOR (POWER)	
CN2602	1-695-915-11	TAB (CONTACT)	
CN2603 ⚠	*1-691-291-11	PIN, CONNECTOR (PC BOARD) 5P	
		< DIODE >	
D2150	8-719-081-56	DIODE L-59SRSGC-CC	
D2151	8-719-109-89	DIODE RD5.6ESB2	
D2152	8-719-109-89	DIODE RD5.6ESB2	
		< CLIP FUSE >	
FH2601 ⚠	1-533-725-11	HOLDER, FUSE	
		< IC >	
IC2150	8-742-180-30	HYB IC SBX3081-51(30)	
		< TRANSISTOR >	
Q2150	8-729-027-38	TRANSISTOR DTA144EKA-T146	
Q2151	8-729-900-53	TRANSISTOR DTC114EK	
		< RESISTOR >	
R2150	1-216-813-11	RES-CHIP 220 5%	1/10W
R2151	1-216-813-11	RES-CHIP 220 5%	1/10W
R2152	1-216-841-11	RES-CHIP 47K 5%	1/10W
R2153	1-216-829-11	RES-CHIP 4.7K 5%	1/10W
R2154	1-216-825-11	RES-CHIP 2.2K 5%	1/10W
R2155	1-216-809-11	RES-CHIP 100 5%	1/10W
R2156	1-216-815-11	RES-CHIP 330 5%	1/10W
R2601 ⚠	1-202-719-00	SOLID 1M 10%	1/2W
		< SWITCH >	
S2601 ⚠	1-571-433-21	SWITCH, PUSH (AC POWER)	
		< VARISTOR >	
VD2601 ⚠	1-803-830-11	VARISTOR (ERZV14D621)	

F3 Board Variant Parts KV-32FQ80

REF.NO.	PART.NO	DESCRIPTION	REMARK
		< FUSE >	
F2601 ⚠	1-576-232-21	FUSE (H.B.C.) 5A/250V	

F3 Board Variant Parts KV-36FQ80

REF.NO.	PART.NO	DESCRIPTION	REMARK
		< FUSE >	
F2601 ⚠	1-576-233-41	FUSE (H.B.C.) 6.3A/250V	

*A-1401-267-A VM Board, Complete

REF.NO.	PART.NO	DESCRIPTION	REMARK
	4-382-854-01	SCREW (M3X8), P, SW (+)	
		< CAPACITOR >	
C5400	1-107-883-11	ELECT 330UF	20.00% 16V
C5401	1-126-935-11	ELECT 470UF	20.00% 16V
C5402	1-137-150-11	FILM 0.01UF	5.00% 100V
C5403	1-126-935-11	ELECT 470UF	20.00% 16V
C5405	1-126-933-11	ELECT 100UF	20.00% 16V
C5406	1-126-935-11	ELECT 470UF	20.00% 16V
C5407	1-107-364-11	MYLAR 0.01UF	10.00% 200V
C5408	1-107-364-11	MYLAR 0.01UF	10.00% 200V
C5409	1-107-649-11	ELECT 2.2UF	20.00% 250V
C5410	1-130-471-00	MYLAR 0.001UF	5.00% 50V
C5411	1-130-471-00	MYLAR 0.001UF	5.00% 50V
C5412	1-126-935-11	ELECT 470UF	20.00% 16V
C5413	1-126-935-11	ELECT 470UF	20.00% 16V
C5414	1-107-652-11	ELECT 10UF	20.00% 250V
C5415	1-107-363-91	MYLAR 0.0068UF	10.00% 200V
C5417	1-102-514-11	CERAMIC 22PF	5.00% 50V
C5418	1-101-880-00	CERAMIC 47PF	5.00% 50V
		< CONNECTOR >	
CN5402	*1-564-506-11	PLUG, CONNECTOR 3P	
CN5444	*1-770-723-11	CONNECTOR, BOARD TO BOARD 8P	
CN5602	*1-564-508-11	PLUG, CONNECTOR 5P	
		< DIODE >	
D5400	8-719-991-33	DIODE 1SS133T-77	
D5401	8-719-510-02	DIODE D1NS4	
D5402	1-535-143-61	LEAD, JUMPER (5.0MM)	
D5403	8-719-991-33	DIODE 1SS133T-77	
D5404	8-719-991-33	DIODE 1SS133T-77	
D5405	8-719-924-11	DIODE MTZJ-T-77-22	
D5406	8-719-924-11	DIODE MTZJ-T-77-22	

REF.NO.	PART.NO	DESCRIPTION			REMARK
		< FERRITE BEAD >			
FB5400	1-535-143-61	LEAD, JUMPER (5.0MM)			
FB5401	1-535-143-61	LEAD, JUMPER (5.0MM)			
		< COIL >			
L5400	1-410-784-41	INDUCTOR	0.18UH		
L5401	1-414-930-21	INDUCTOR	2.2UH		
		< TRANSISTOR >			
Q5400	8-729-119-78	TRANSISTOR 2SC2785-HFE			
Q5401	8-729-119-78	TRANSISTOR 2SC2785-HFE			
Q5402	8-729-119-78	TRANSISTOR 2SC2785-HFE			
Q5403	8-729-119-78	TRANSISTOR 2SC2785-HFE			
Q5404	8-729-026-39	TRANSISTOR 2SA933AS-QT			
Q5405	8-729-026-39	TRANSISTOR 2SA933AS-QT			
Q5406	8-729-045-05	TRANSISTOR 2SA2005			
Q5407	8-729-045-04	TRANSISTOR 2SC5511			
Q5408	8-729-026-39	TRANSISTOR 2SA933AS-QT			
Q5409	8-729-119-78	TRANSISTOR 2SC2785-HFE			
		< RESISTOR >			
R5401	1-247-843-11	CARBON	3.3K	5%	1/4W
R5402	1-249-413-11	CARBON	470	5%	1/4W
R5403	1-249-393-11	CARBON	10	5%	1/4W
R5404	1-249-420-11	CARBON	1.8K	5%	1/4W
R5405	1-249-425-11	CARBON	4.7K	5%	1/4W
R5406	1-249-425-11	CARBON	4.7K	5%	1/4W
R5407	1-249-399-11	CARBON	33	5%	1/4W
R5408	1-247-807-31	CARBON	100	5%	1/4W
R5409	1-249-409-11	CARBON	220	5%	1/4W
R5410	1-249-401-11	CARBON	47	5%	1/4W
R5411	1-249-401-11	CARBON	47	5%	1/4W
R5412	1-249-429-11	CARBON	10K	5%	1/4W
R5413	1-249-414-11	CARBON	560	5%	1/4W
R5414	1-249-432-11	CARBON	18K	5%	1/4W
R5415	1-260-316-51	CARBON	100	5%	1/2W
R5416	1-249-388-11	CARBON	3.9	5%	1/4W
R5417	1-249-432-11	CARBON	18K	5%	1/4W
R5418	1-249-414-11	CARBON	560	5%	1/4W
R5419	1-249-421-11	CARBON	2.2K	5%	1/4W
R5420	1-249-421-11	CARBON	2.2K	5%	1/4W
R5421	1-249-386-11	CARBON	2.7	5%	1/4W
R5422	1-249-405-11	CARBON	100	5%	1/4W
R5423	1-215-915-11	METAL OXIDE	470	5%	3W
R5425	1-535-143-61	LEAD, JUMPER (5.0MM)			
R5427	1-249-401-11	CARBON	47	5%	1/4W
R5428	1-249-413-11	CARBON	470	5%	1/4W
R5429	1-249-413-11	CARBON	470	5%	1/4W
R5430	1-249-417-11	CARBON	1K	5%	1/4W
R5432	1-249-415-11	CARBON	680	5%	1/4W
R5433	1-249-400-11	CARBON	39	5%	1/4W
R5434	1-249-395-11	CARBON	15	5%	1/4W

Note : The components identified by shading and marked ⚠ are critical for safety. Replace only with the part numbers specified in the parts list.

REF.NO.	PART.NO	DESCRIPTION	REMARK

MISCELLANEOUS

⚠	1-571-433-21	SWITCH, PUSH (AC POWER)	
	1-424-855-11	COIL, CHOKE 29MMH	
⚠	1-765-286-11	CORD, POWER	
	8-598-536-20	FRONTEND BTF-EF412 (KV-32FQ80B)	
	8-598-534-10	FRONTEND BTF-EC412 (KV-32FQ80E/32FQ80K/ KV-36FQ80E/36FQ80K)	
	8-598-530-10	FRONTEND BTF-EU612 (KV-32FQ80U)	
	8-598-536-20	FRONTEND BTF-EF412 (KV-36FQ80B)	
	*1-824-464-11	PP CABLE	
⚠	1-453-444-21	TRANSFORMER ASSY, FLYBACK (NX-6020//Z2B4)	
	1-542-437-11	SPEAKER (2CM)	
	1-825-177-11	LOUDSPEAKER (4.2X24CM)	
⚠	8-451-480-11	DEFLECTION YOKE (Y32RVC2) (KV-32FQ80)	
⚠	8-451-507-32	DEFLECTION YOKE (Y36RVC2-M3) (KV-36FQ80)	
	1-452-896-11	COIL, NA ROTATION (RT200)	
⚠	8-453-011-11	NECK ASSY, (NA299-M) (KV-32FQ80)	
⚠	8-453-007-31	NECK ASSY, (NA324-M3) (KV-36FQ80)	
⚠	1-424-888-11	COIL, DEGAUSSING (KV-32FQ80)	
⚠	1-428-963-11	DEGAUSSING COIL (KV-36FQ80)	
⚠	1-251-946-11	CAP ASSY, HIGH-VOLTAGE	
⚠	8-735-079-05	PICTURE TUBE (W76LLZ060X) (KV-32FQ80)	
⚠	8-735-061-05	PICTURE TUBE (W86LPH010X) (KV-36FQ80)	
	1-452-094-00	MAGNET, ROTATABLE DISK; 15MM	

ACCESSORIES AND PACKAGING MATERIALS

	*4-055-672-01	BAG, PROTECTION
	*4-087-592-01	CUSHION UPPER (KV-32FQ80)
	*4-087-544-01	CUSHION UPPER (KV-36FQ80)
	*4-087-593-01	CUSHION LOWER (KV-32FQ80)
	*4-087-545-01	CUSHION LOWER (KV-36FQ80)
	*4-087-594-01	INDIVIDUAL CARTON (KV-32FQ80)
	*4-087-546-01	INDIVIDUAL CARTON (KV-36FQ80)
	4-087-551-11	INSTRUCTION MANUAL (KV-32FQ80B/36FQ80B) (GERMAN/FRENCH/ITALIAN/DUTCH)
	4-087-551-21	INSTRUCTION MANUAL (KV-32FQ80E/36FQ80E) (GERMAN/GREEK/TURKISH)
	4-087-551-31	INSTRUCTION MANUAL (KV-32FQ80E) (DANISH/SPANISH/NORWEGIAN/PORTUGUESE SWEDISH/FINNISH)
	4-087-551-41	INSTRUCTION MANUAL (KV-32FQ80E) (ITALIAN)
	4-087-551-51	INSTRUCTION MANUAL (KV-32FQ80K/36FQ80K) (BULGARIAN/CZECH/ENGLISH/HUNGARIAN/ POLISH/RUSSIAN)
	4-087-551-61	INSTRUCTION MANUAL (KV-32FQ80U) (ENGLISH)

REMOTE COMMANDER

	1-477-176-11	REMOTE COMMANDER (RM-936)

TRACE

A new TV Repair Assistance Tool that combines ease of use and powerful PC software tools to allow you to save valuable time during many TV repairs.

The TRACE interface connects to the PC's serial port. It provides connection to the TV's I^2C bus and can be provided with an InfraRed transmitter (optional).

The interface is powered by a standard 9 V PP3 battery for portable use, and can also be powered by an external 9V/25mA DC power supply.

The TRACE software that is supplied with the interface allows you to:

- Read, restore and compare NVM contents via the I^2C bus
- Acknowledge check of all I^2C devices in the TV set
- Read Error Codes (emulation of the Error Reader tool)

With the optional IR Add-on kit, the following features can be added:

- Remote Commander emulation
- User programmable Functional Check through Infrared
- Fast and documented Test Mode setting of all Sony TV chassis

Additional features such as Adjustments and Troubleshooting are available in chassis-dependent software modules. Please contact your local Sony Service organisation for the latest information.

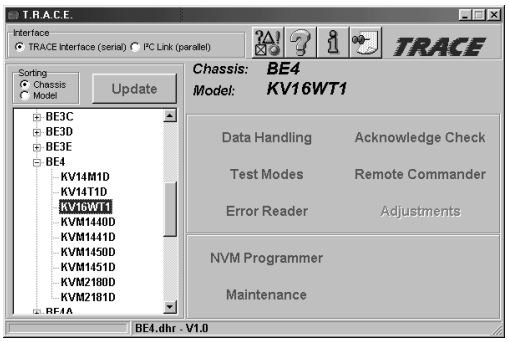

Note: For workshops already using the existing I^2C Link parallel port interface (9-948-320-30), this software can be used as well, replacing the TV Data Handling software (9-948-340-50), but Error Reader and IR functions can only be accessed with the TRACE interface.

Partnumbers:	TRACE Starter Kit (TRACE interface + software):	9-948-320-70
	TRACE Software (for users of the I^2C Link interface):	9-948-340-80
	TRACE IR Add-on (IR interface + Remote Commander software):	9-948-320-80

PC requirements: IBM-compatible PC with operating system Windows95, Windows98, or WindowsNT*.

* WindowsNT only supported with TRACE interface

9-927-425-01

Sony Corporation
Sony UK
Service Promotions Dept.

English
02GP7100-1
Printed in U.K.

© 2002.7